Plastic model kit containing 554 parts. Wing span: 587.7mm Length: 457 mm

A-20G Havoc over Europe

History of A-20G Havoc

The Douglas A-20 Havoc is an American-designed, twin-engined, medium bomber used mainly for low- and medium altitude missions. The prototype made it's maiden flight on August, 7th 1939, and the type was first used operationally by the French. After their defeat at the end of June 1940, the remainder of the aircraft still to be delivered were taken over by the RAF as the Boston (Havoc for night-fighter versions).

With a production of 7.478 aircraft built, it was widely used by the Allies such as the USAAF, RAF, RAAF, SAAF, Soviet Air Force, France and postwar by Brasil and Nicaragua.

With a crew of three it was initially used for bombing operations when fitted with glazed noses, later types were fitted with a Martin 250CE dorsal turret and a six-gun solid nose, which made them suitable for strafing missions. Apart from the Europe theatre of operations, the A-20 was widely used operationally in North Africa, the Pacific, New-Guinea and the Eastern Front.

BE CAREFUL
REMOVE
GLUE TOGETHER
PLEASE WAIT FOR A FEW MINUTES UNTIL DRY
MAKE 2 PIECES
DRILL HOLE
DO NOT GLUE
INSTANT GLUE FOR METAL
BEND
FILL HOLE
SEQUENCE OF WORK
OPTIONAL
USED COLOUR
APPLY DECAL
MARKING OPTION

CAUTION

When using both glue and paint, do not use these near an open flame, due to the flammable properties of these items.

The symbols provided, such as 'X', refer to the basic colours of parts, although a more comprehensive list is supplied for your use for Tamiya, Mr Hobby and AK-Interactive codes.

When removing parts from sprues, take extreme care. Consider correct tools such as Xuron Sprue Cutters

Please check the symbology on the left and familiarise yourself before building this model kit.

In cooperation with: AK interactive

www.ak-interactive.com

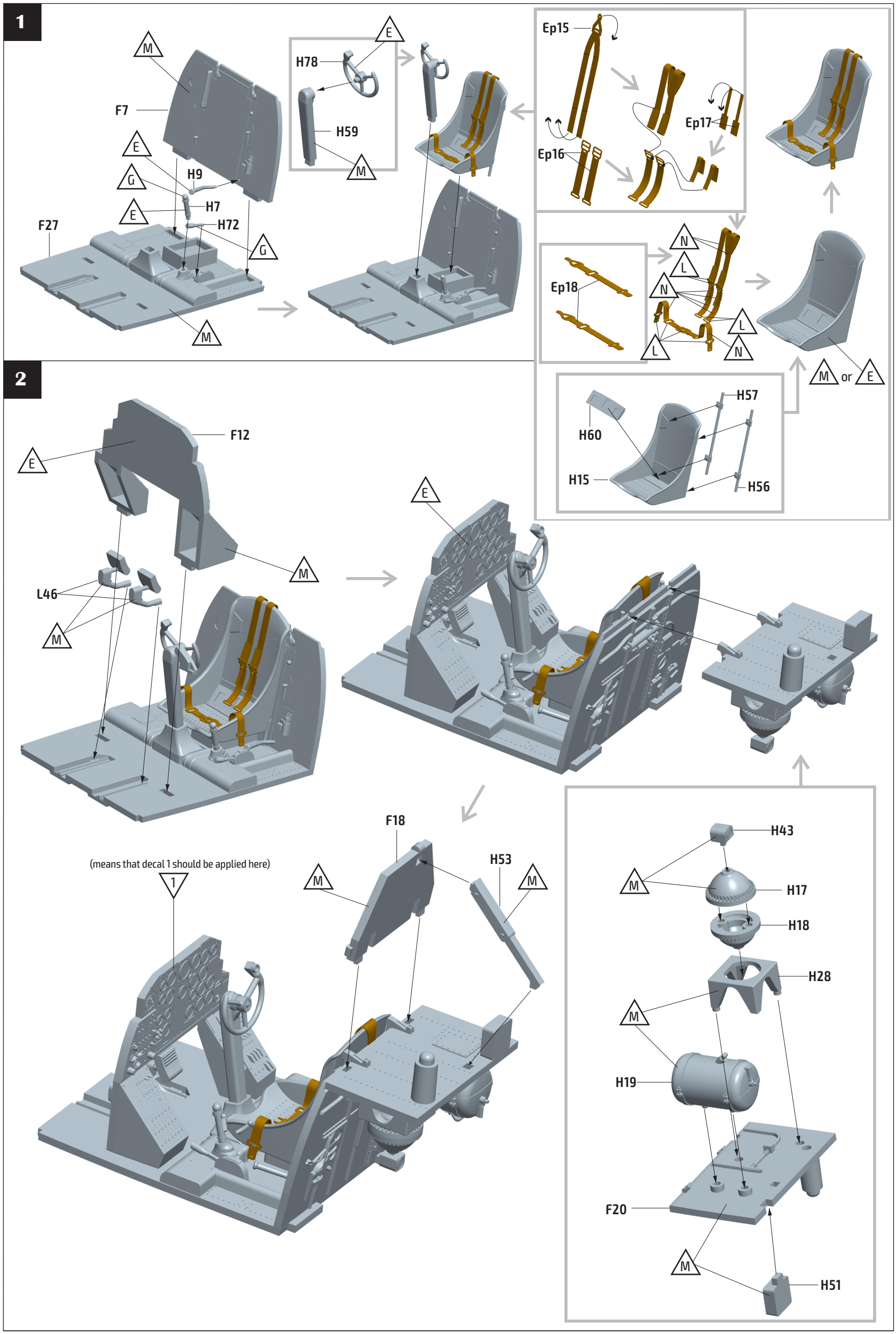
1
M
F7
E
G
H9
E
H7
H72
F27
G
M
E
H78
H59
M
Ep15
Ep17
Ep16
Ep18
N
L
N
L
L
N
M or E
H57
H60
H15
H56
2
E
F12
M
L46
M
E
F18
(means that decal 1 should be applied here)
1
M
H53
M
H43
M
H17
H18
H28
M
H19
F20
M
H51

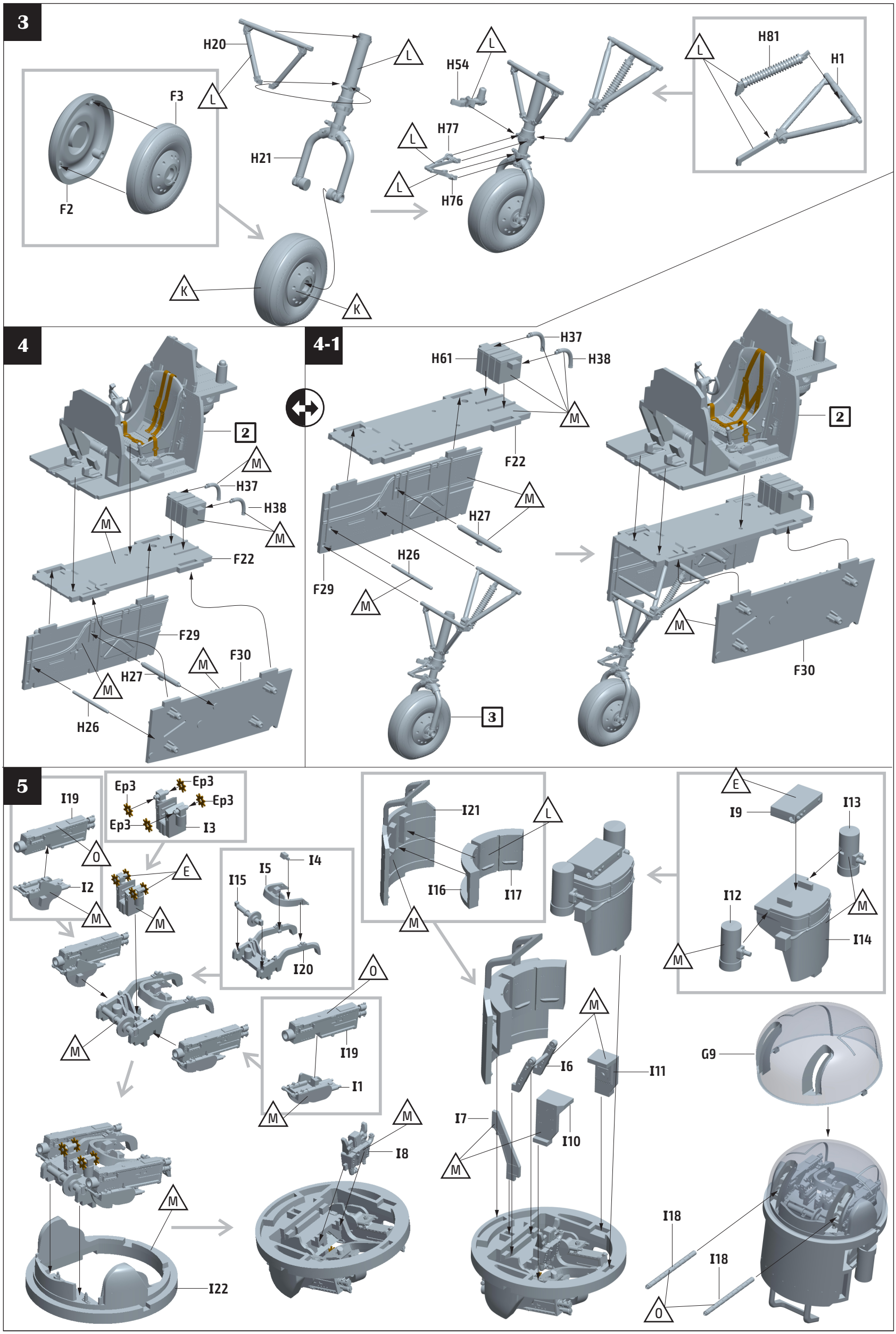
3
H20
L
F3
F2
H21
H54
H77
H76
H81
H1
K
4
2
M
H37
H38
F22
F29
F30
H27
H26
4-1
H61
3
5
I19
O
I2
Ep3
I3
E
I4
I5
I15
I20
I21
I16
I17
I9
I13
I12
I14
I6
I11
I7
I10
I8
I22
G9
I18

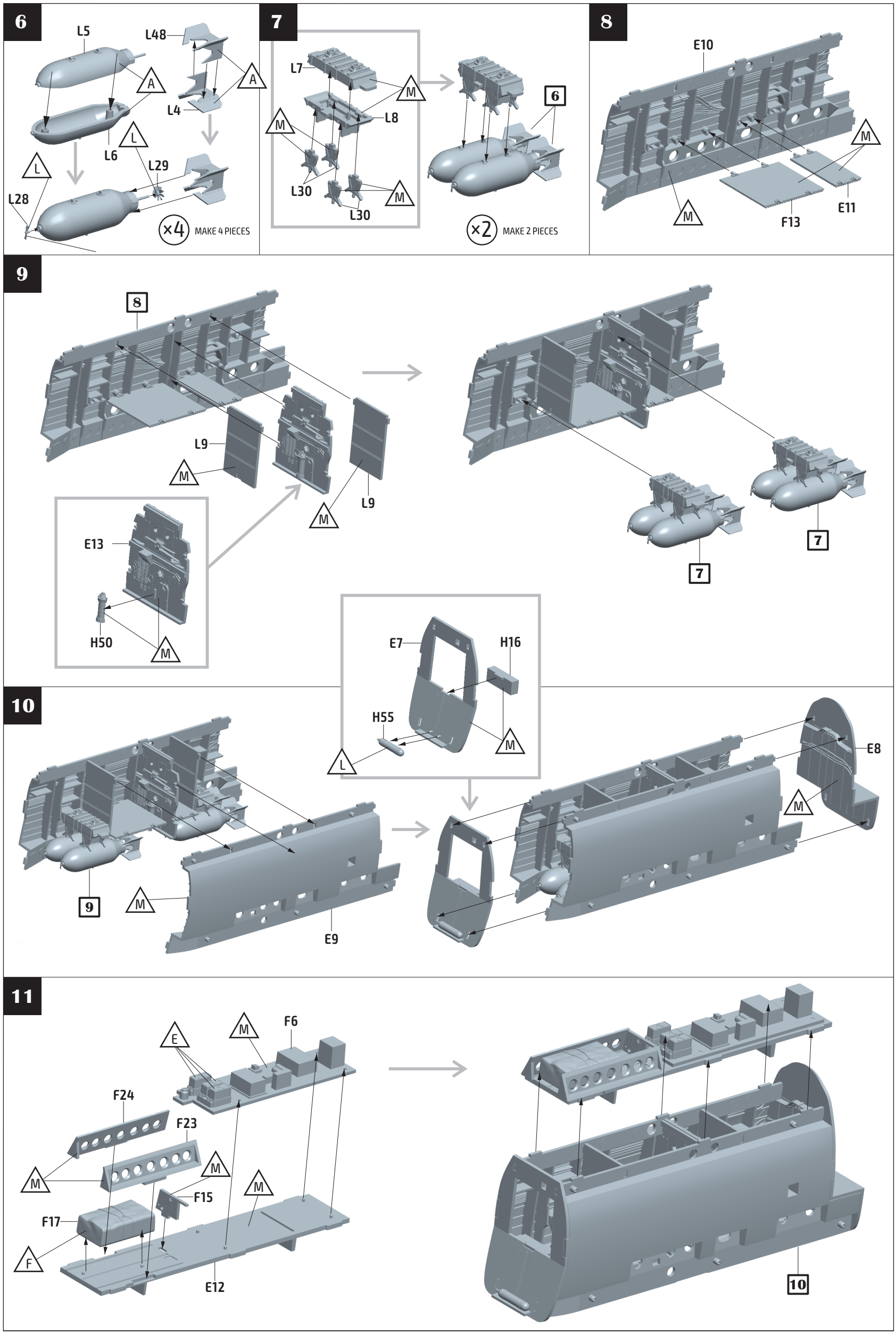
6
L5
L48
A
A
L4
L6
L
L
L29
L28
×4 MAKE 4 PIECES
7
L7
M
L8
M
L30
M
L30
6
×2 MAKE 2 PIECES
8
E10
M
M
F13
E11
9
8
L9
M
M
L9
E13
H50
M
7
7
10
E7
H16
H55
L
M
E8
M
9
M
E9
11
E
M
F6
F24
F23
M
M
M
F15
F17
F
E12
10

12

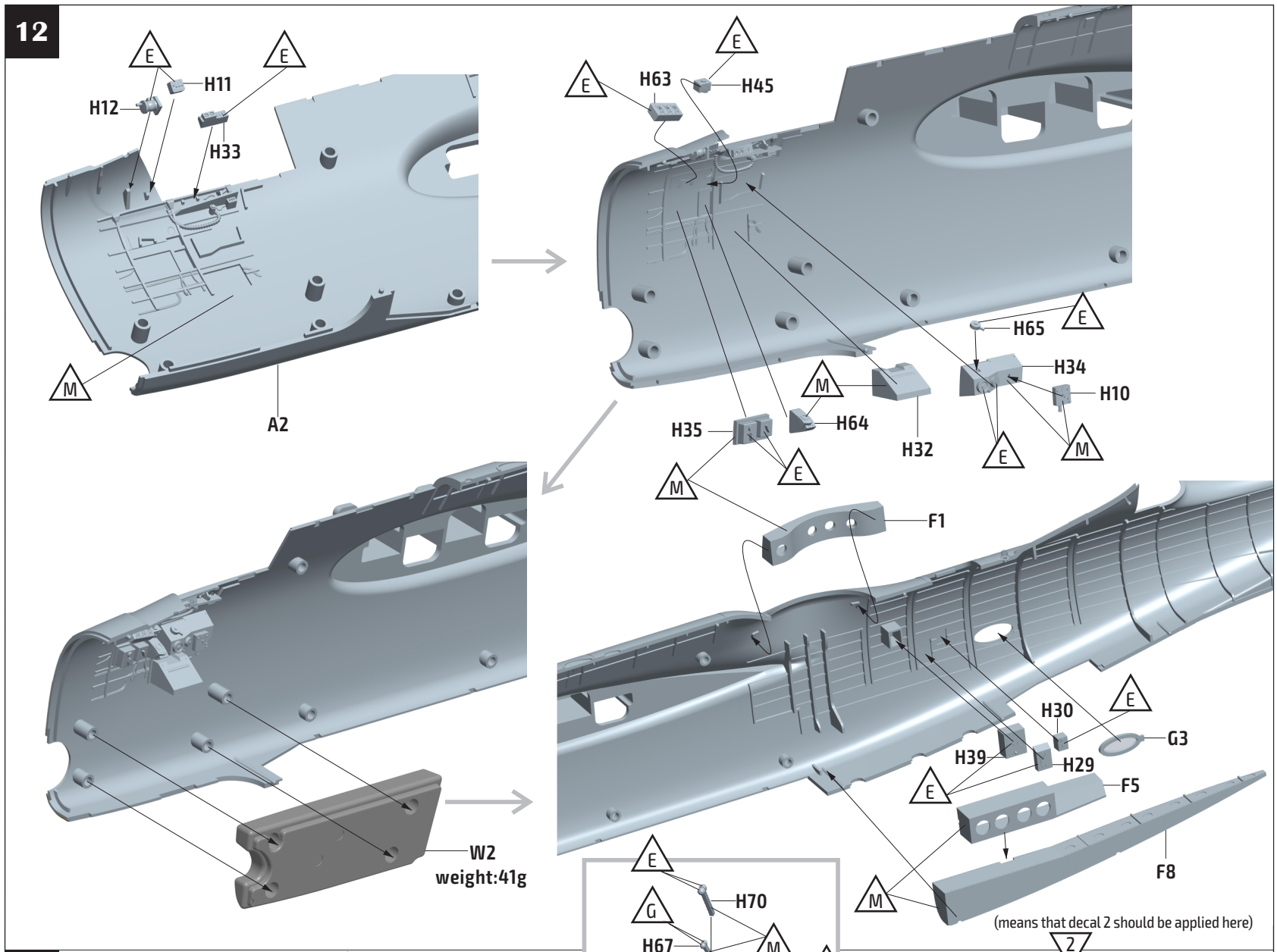
E
H11
E
H12
H33
M
A2
E
H63
E
H45
H65
E
H34
H10
M
H64
H32
E
M
H35
E
M
F1
H30
E
G3
H39
H29
E
F5
F8
M
W2
weight:41g
E
H70
G
H67
M
H4
G
H71
(means that decal 2 should be applied here)
2

13

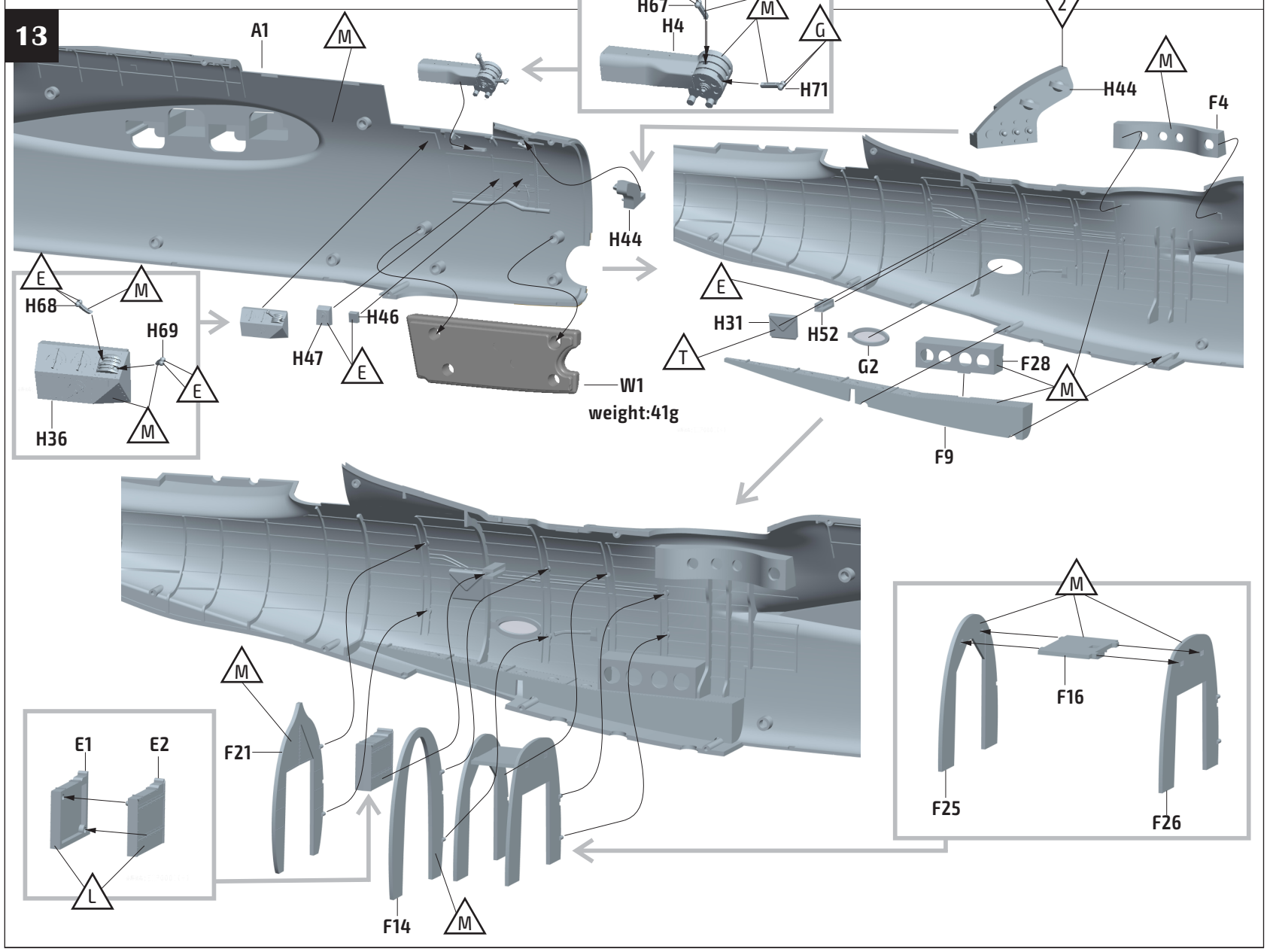
A1
M
H44
M
F4
H44
E
M
H68
H69
E
H36
M
H47
H46
E
W1
weight:41g
E
H31
H52
T
G2
F28
M
F9
M
F21
E1
E2
L
F14
M
M
F16
F25
F26

14

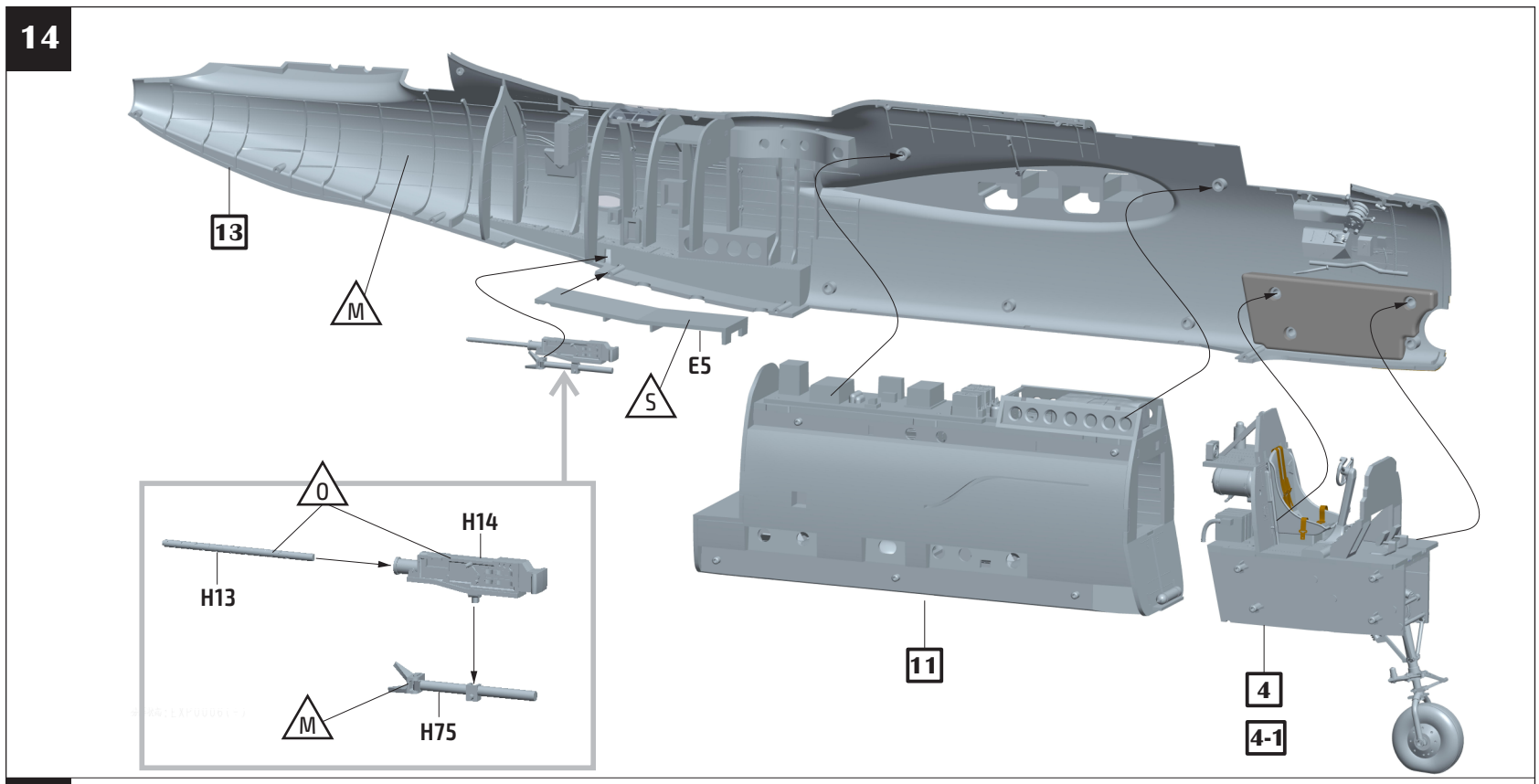
13
M
E5
S
O
H14
H13
M
H75
11
4
4-1

15

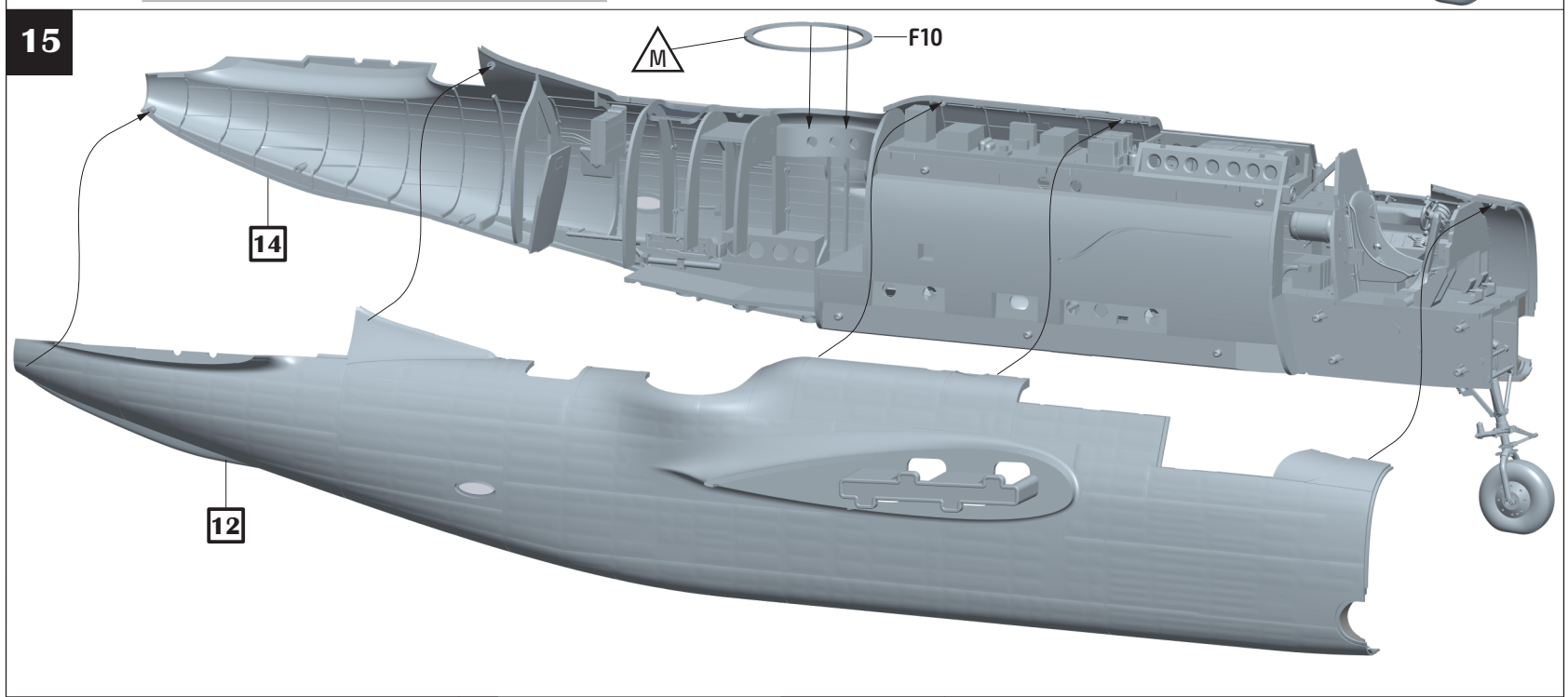
M
F10
14
12

16

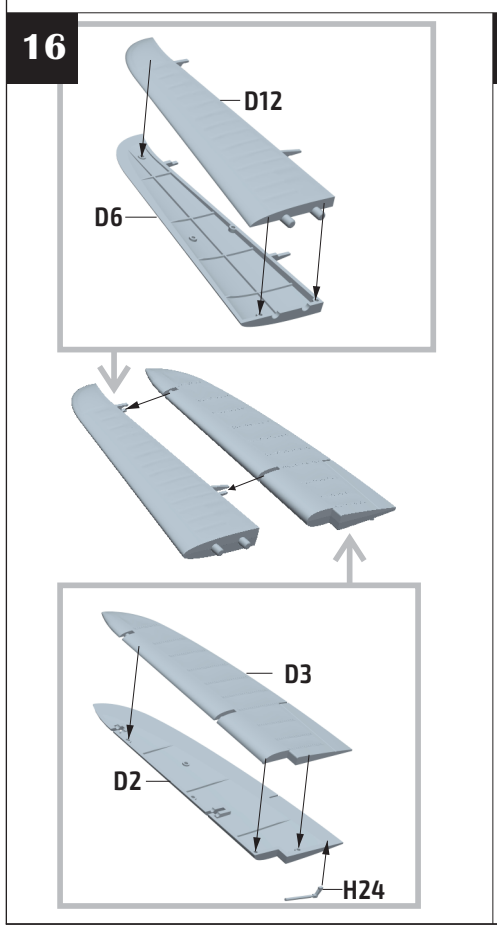
D12
D6
D3
D2
H24

17

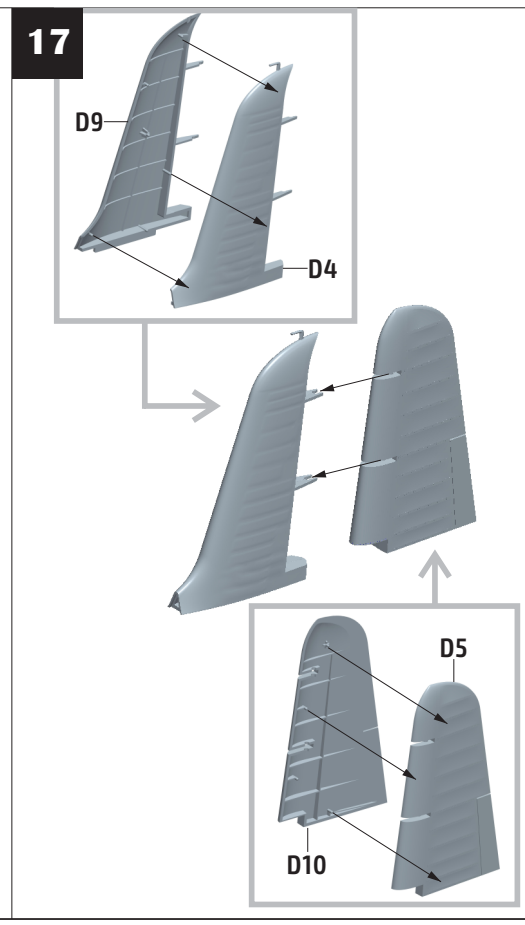
D9
D4
D5
D10

18

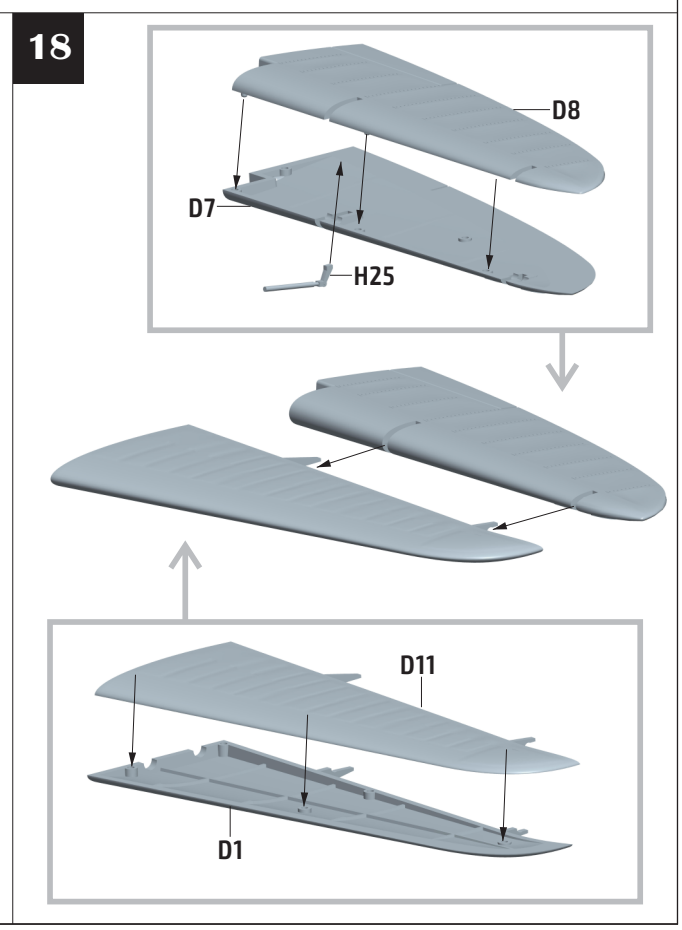
D8
D7
H25
D11
D1

19

G4
M
REMOVE
E3
M
G4
M
E4
E3
M
17
16
5
E6
G7
19-1
18
H62
H66
E

19-1

M
inner frames
M
inner frames
G5
G6
G1

20

K41
M
K21
K13
K25
M
K42
×2 MAKE 2 PIECES
L
K18
K20
L
M
K9

21

M
K40
K12
K19
M
K26
K36

22

×2 MAKE 2 PIECES
L
K18
K20
L
21
M
K8
K27
M
×2 MAKE 2 PIECES
L
K11
K10
L
M
K1
O
K4
M
K16
K30
K6
K31
O
K34
K34
O

23

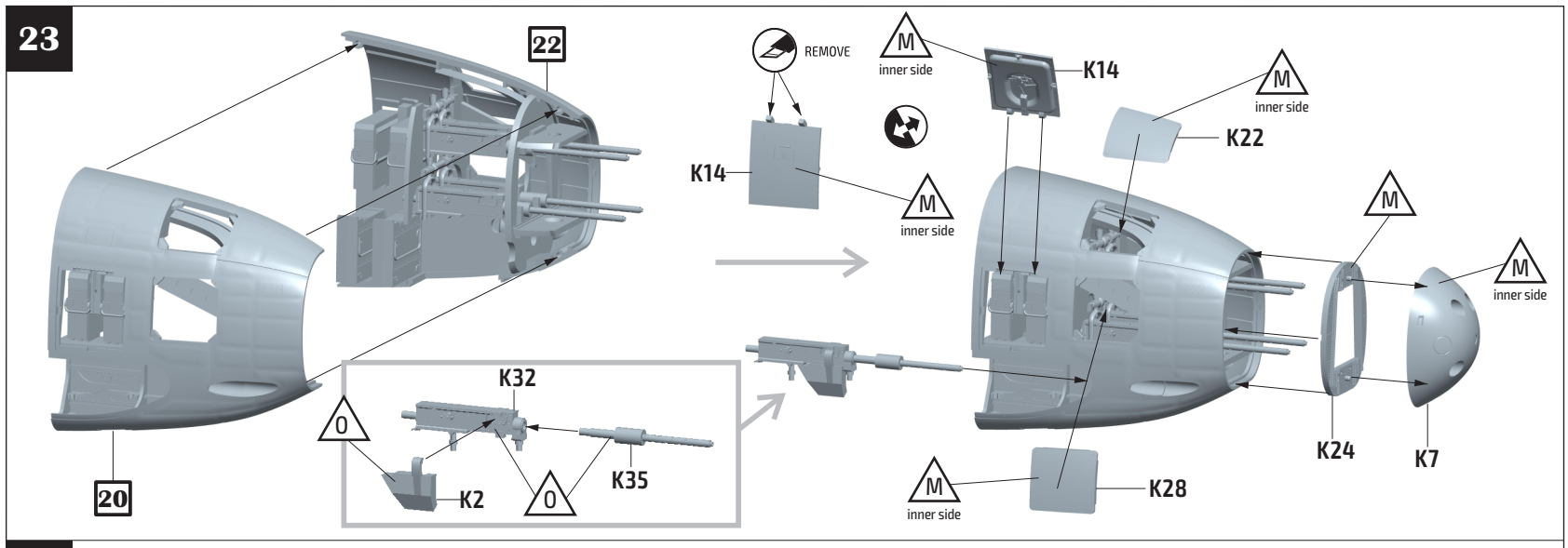

24

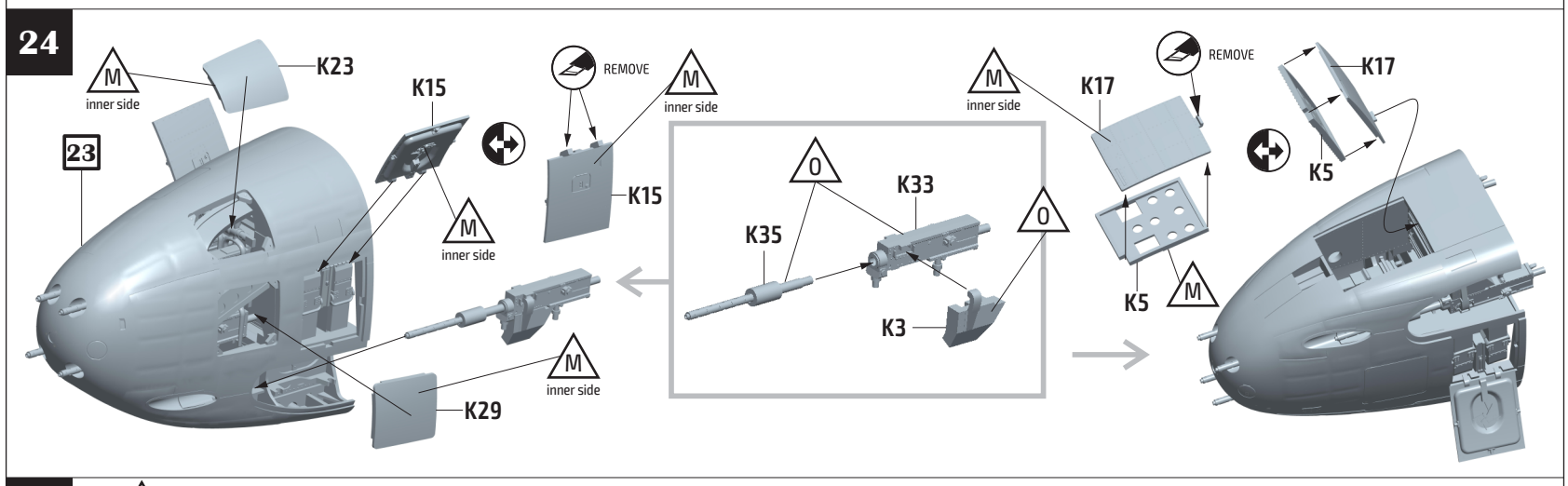

25

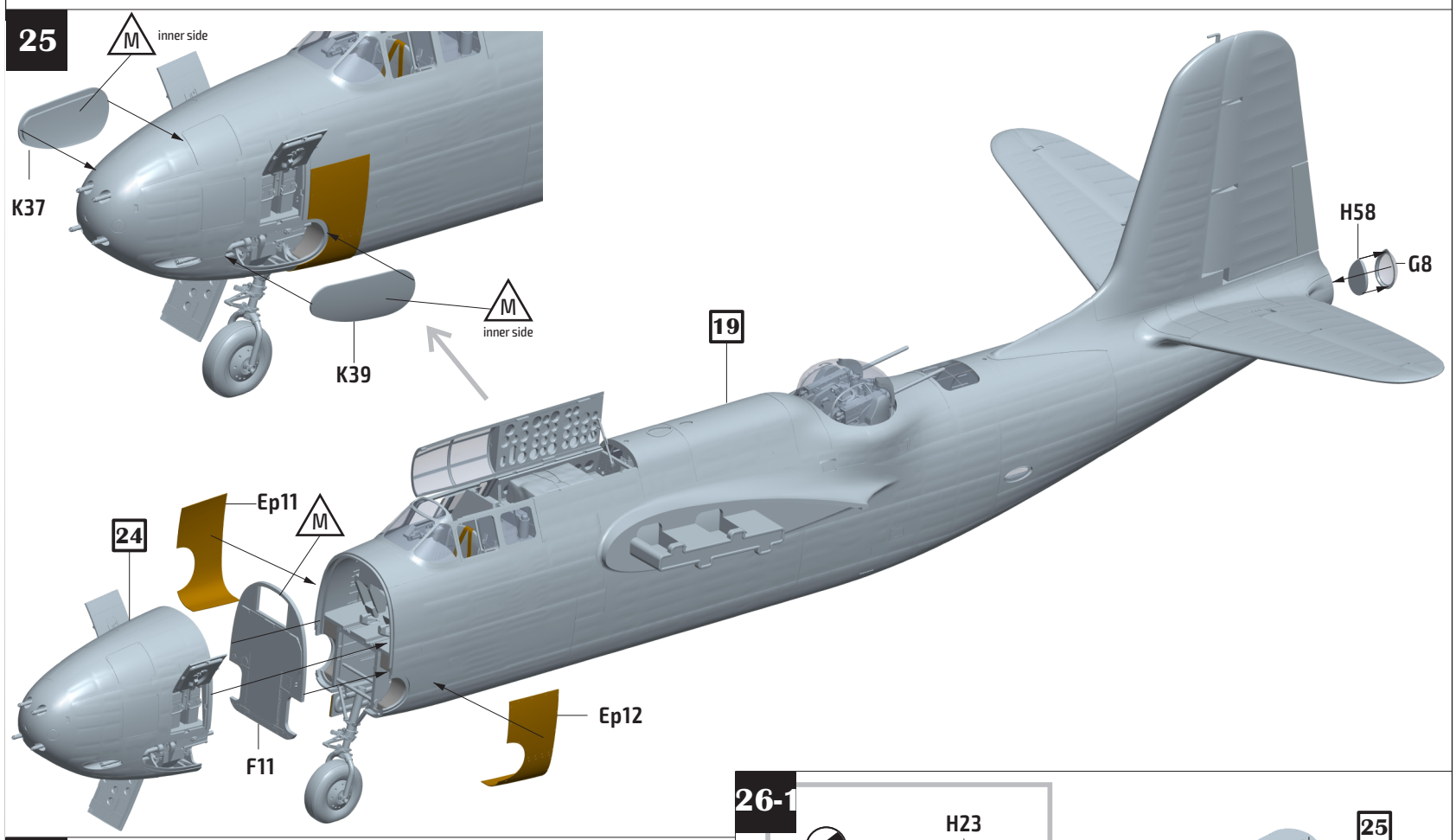

26

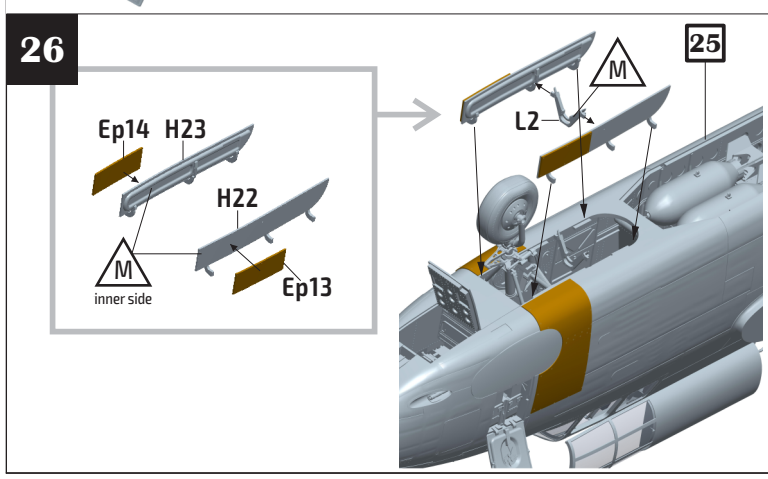

26-1

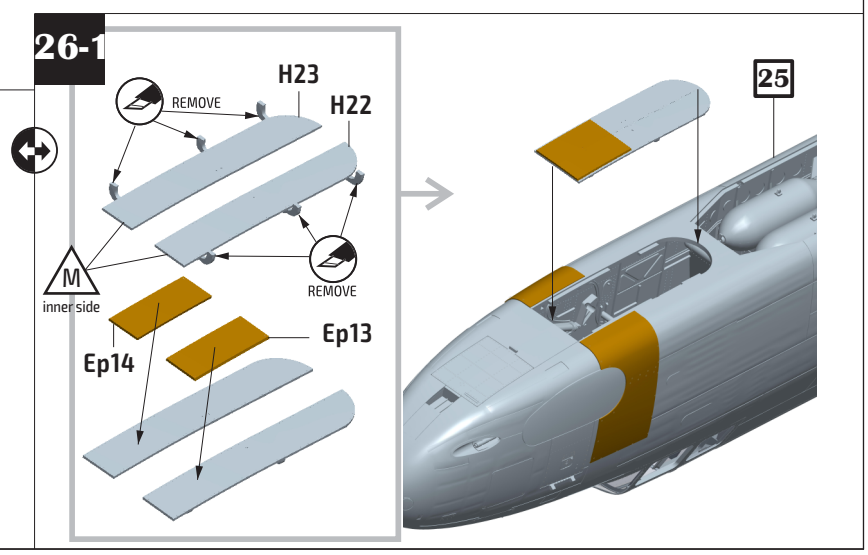

27

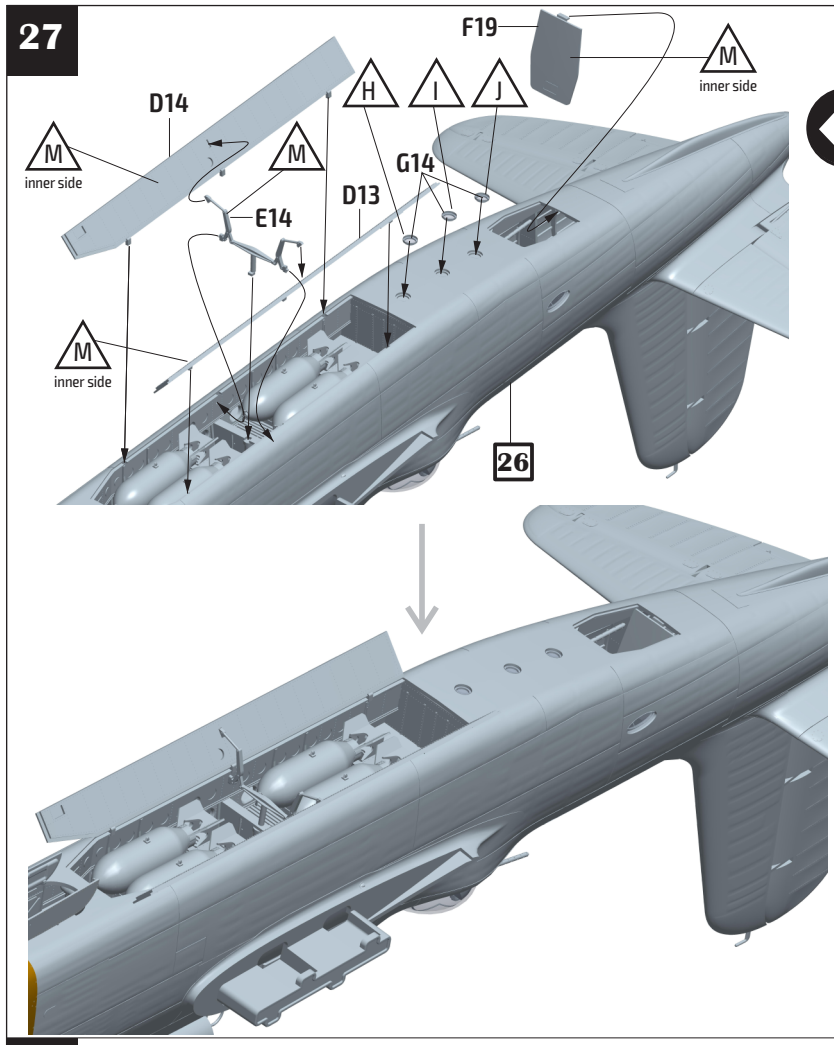

27-1

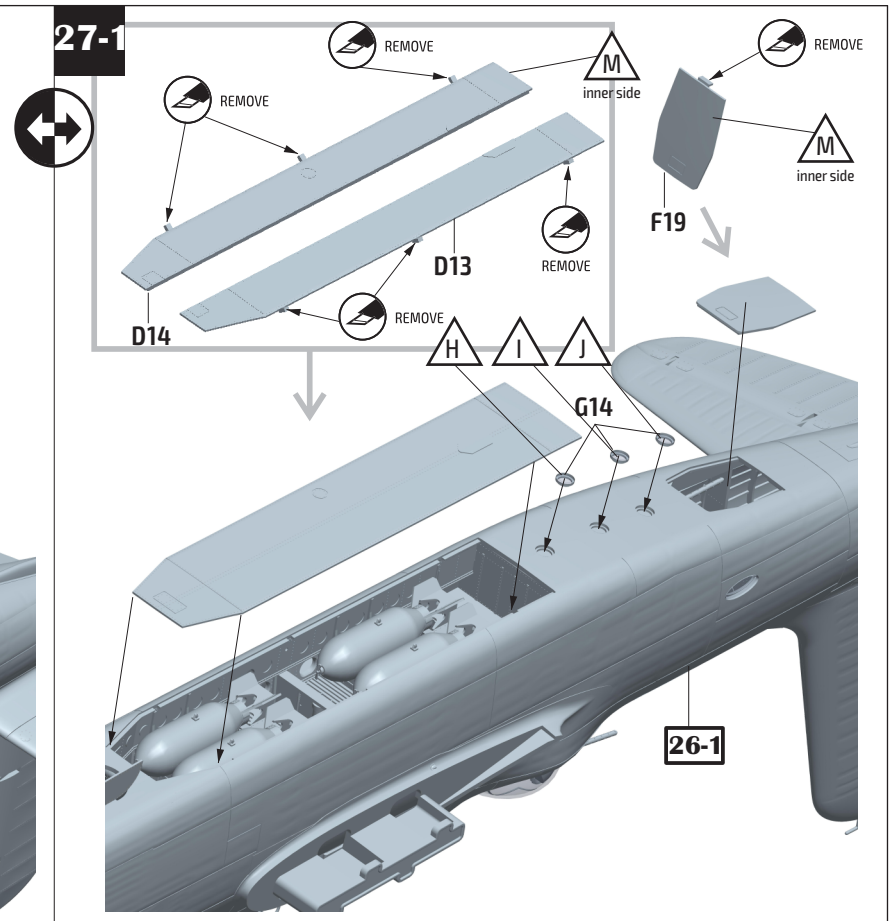

28

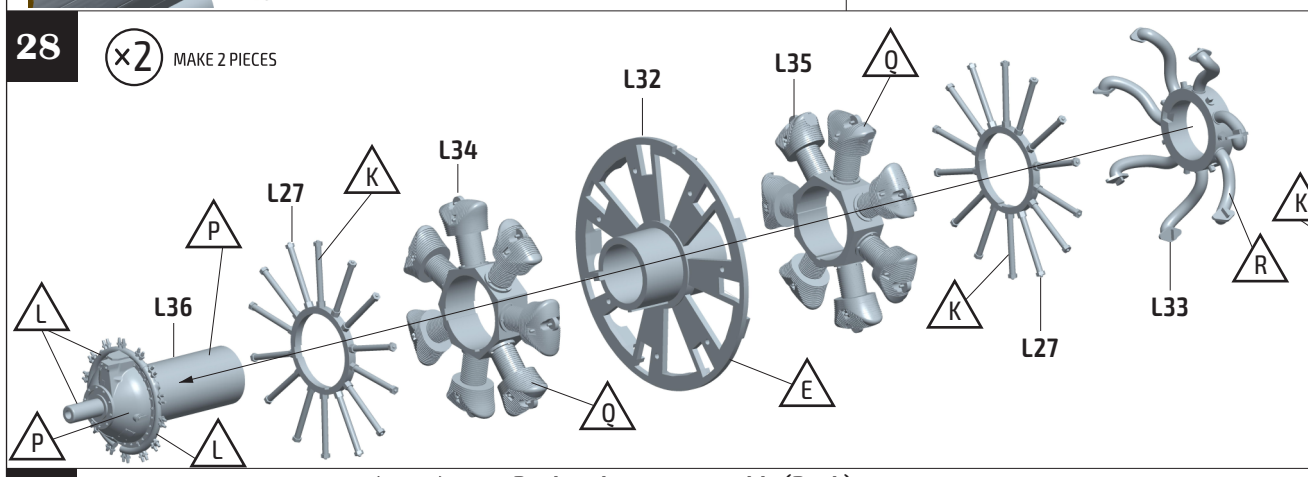

29

Please note the positions of part

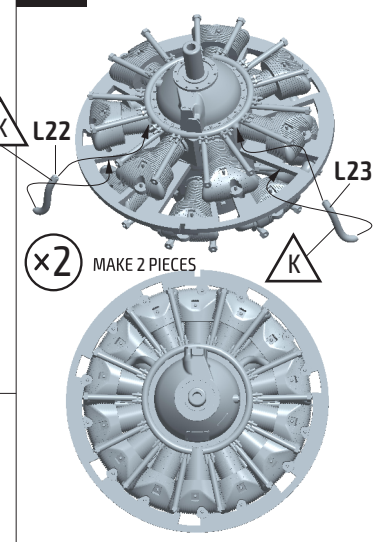

Top roll of cylinders

31

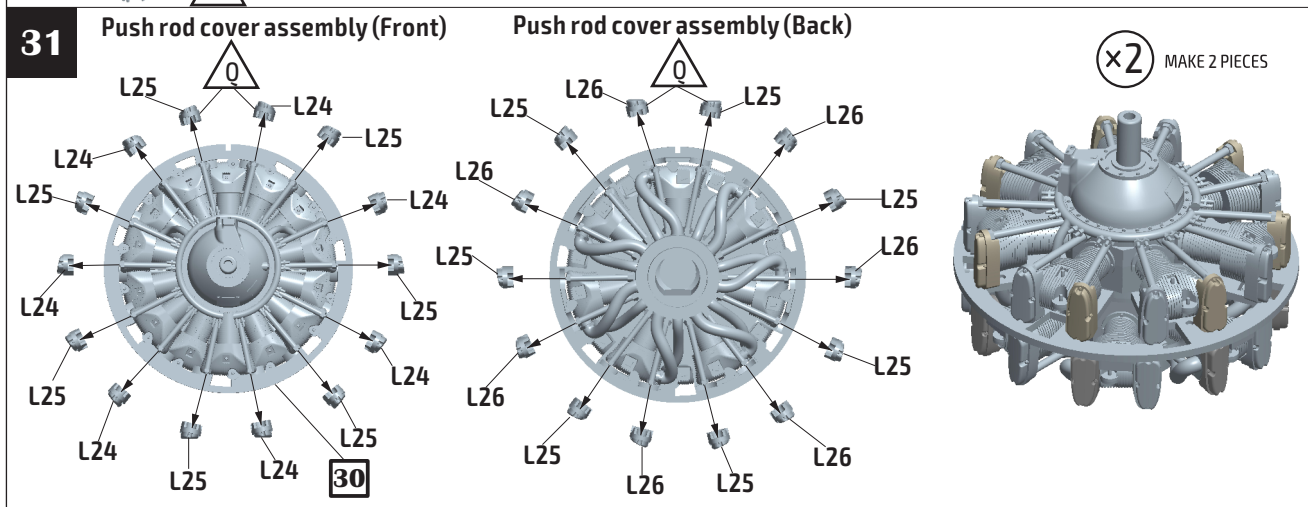

30

Please note the positions of part L31

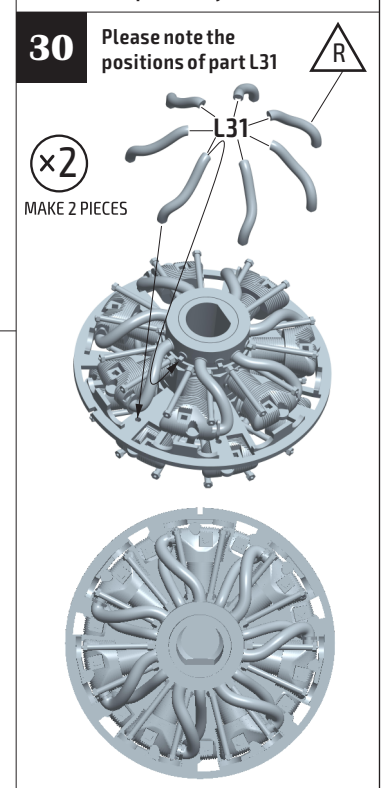

Engine's back

32

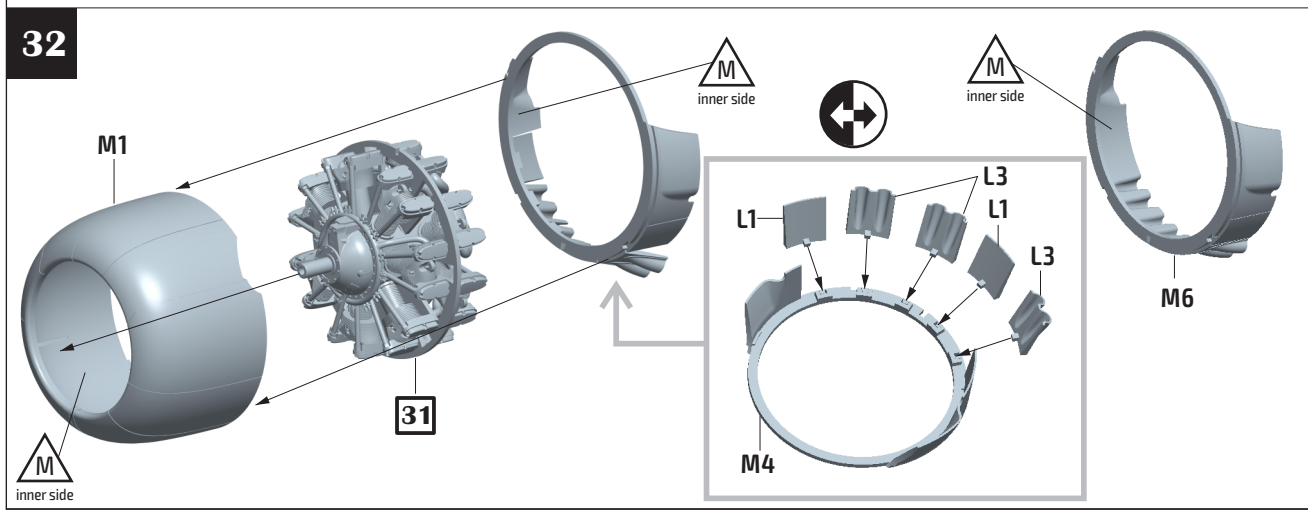

33 Exhuast stacks assembly

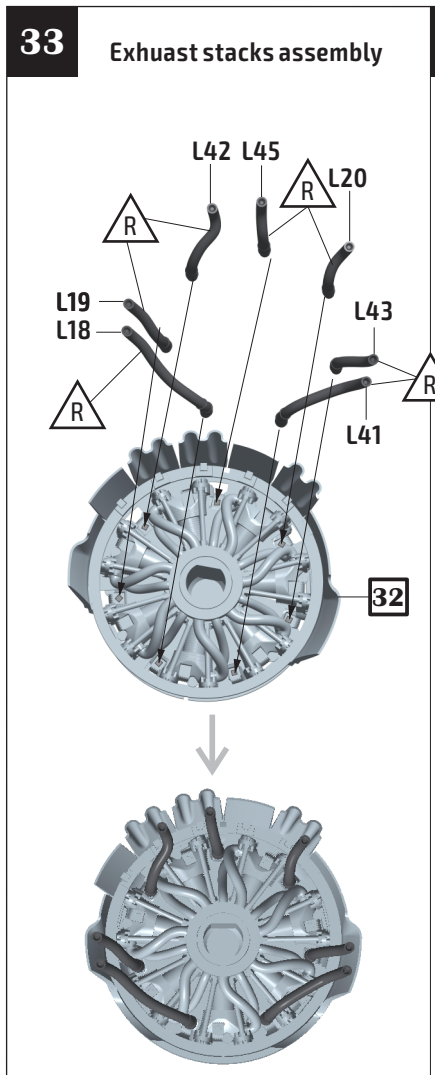

34 Exhuast stacks assembly

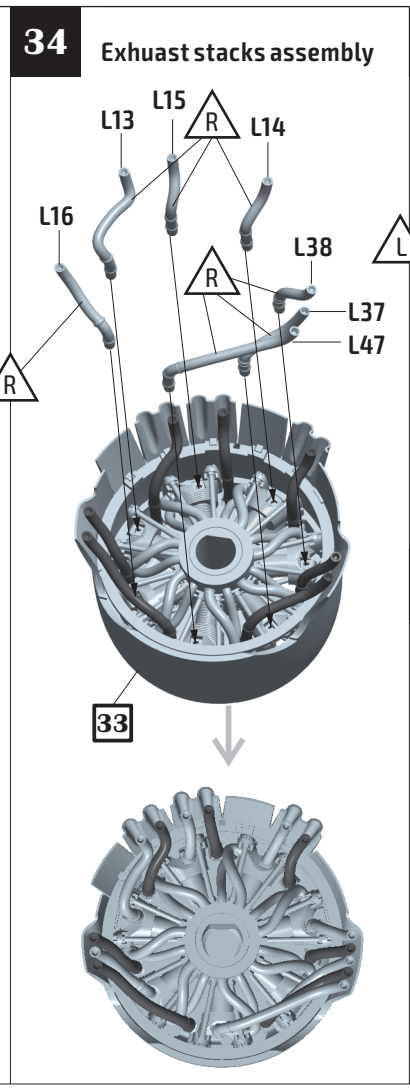

35

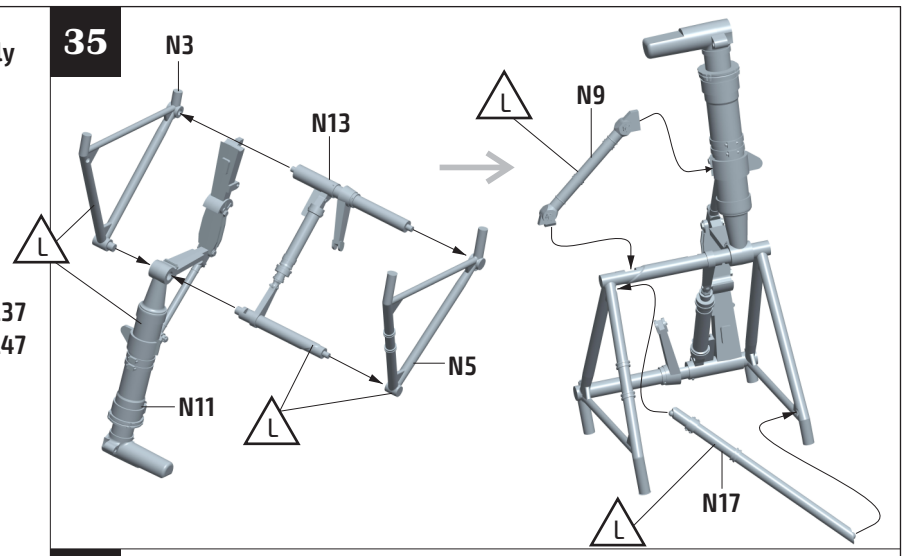

36

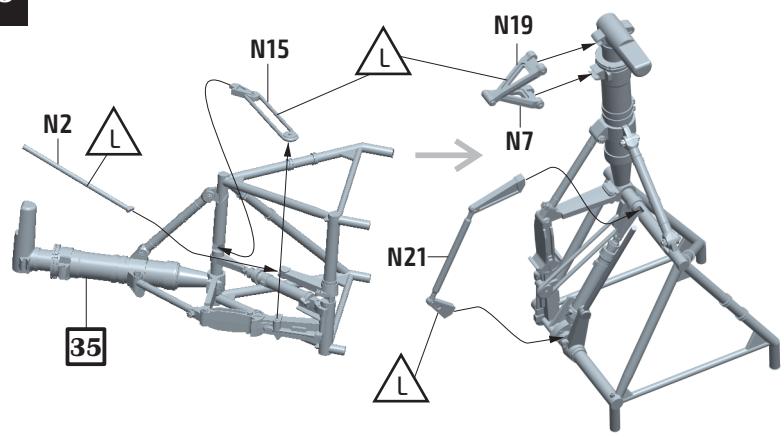

37

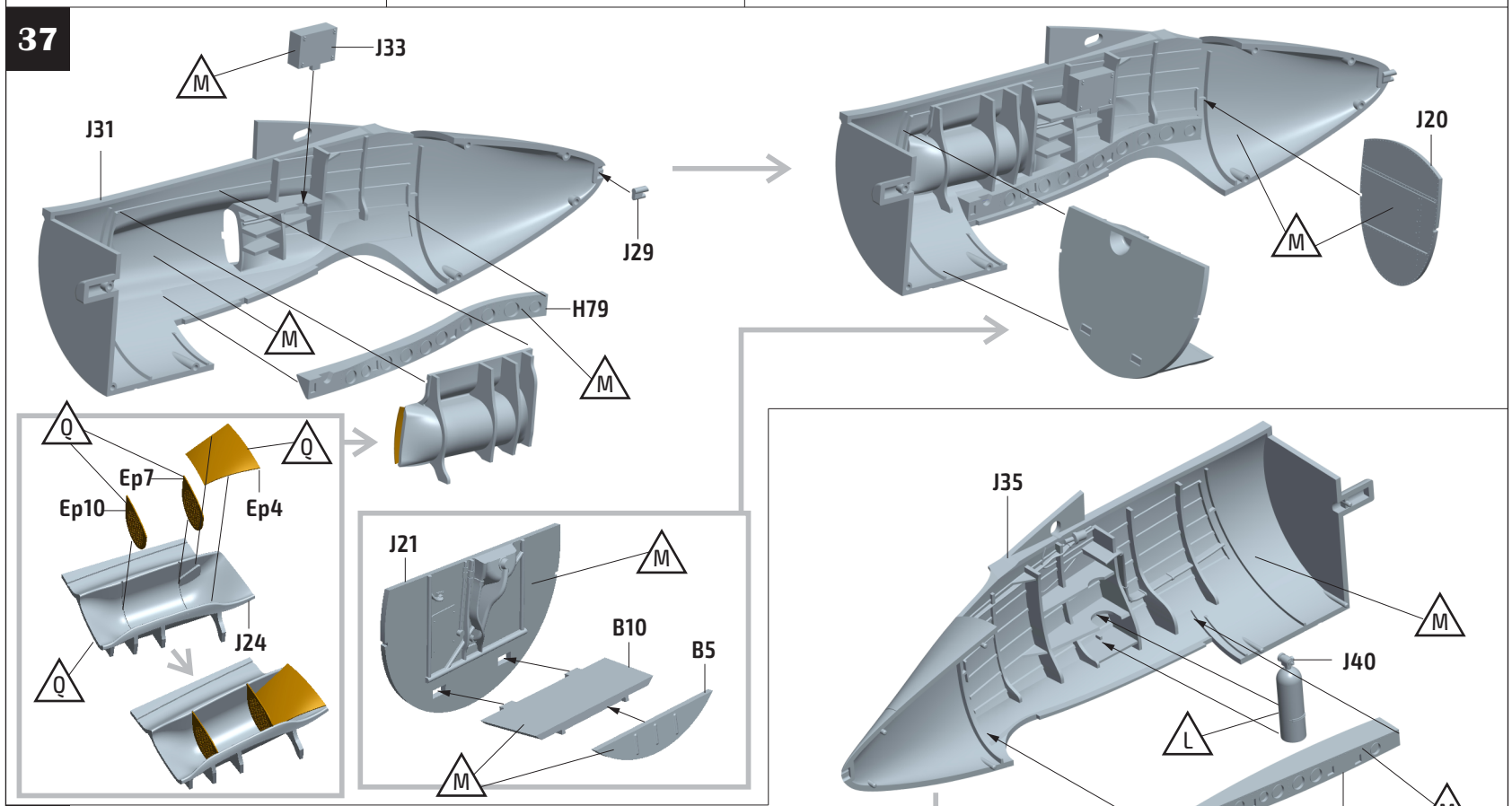

38

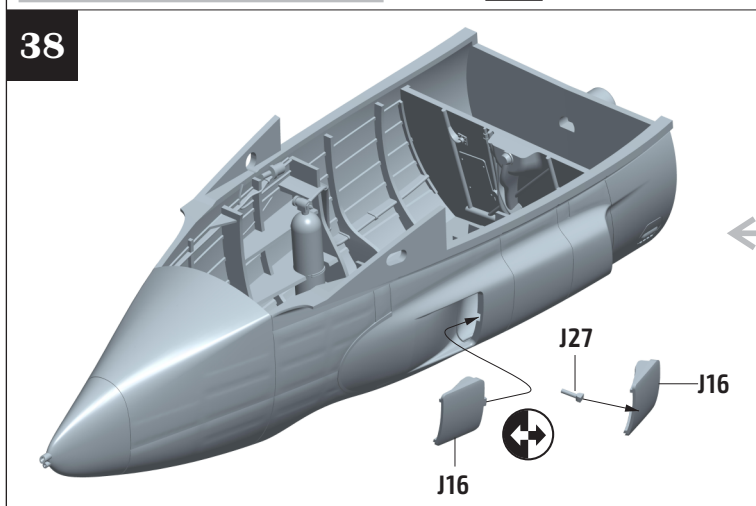

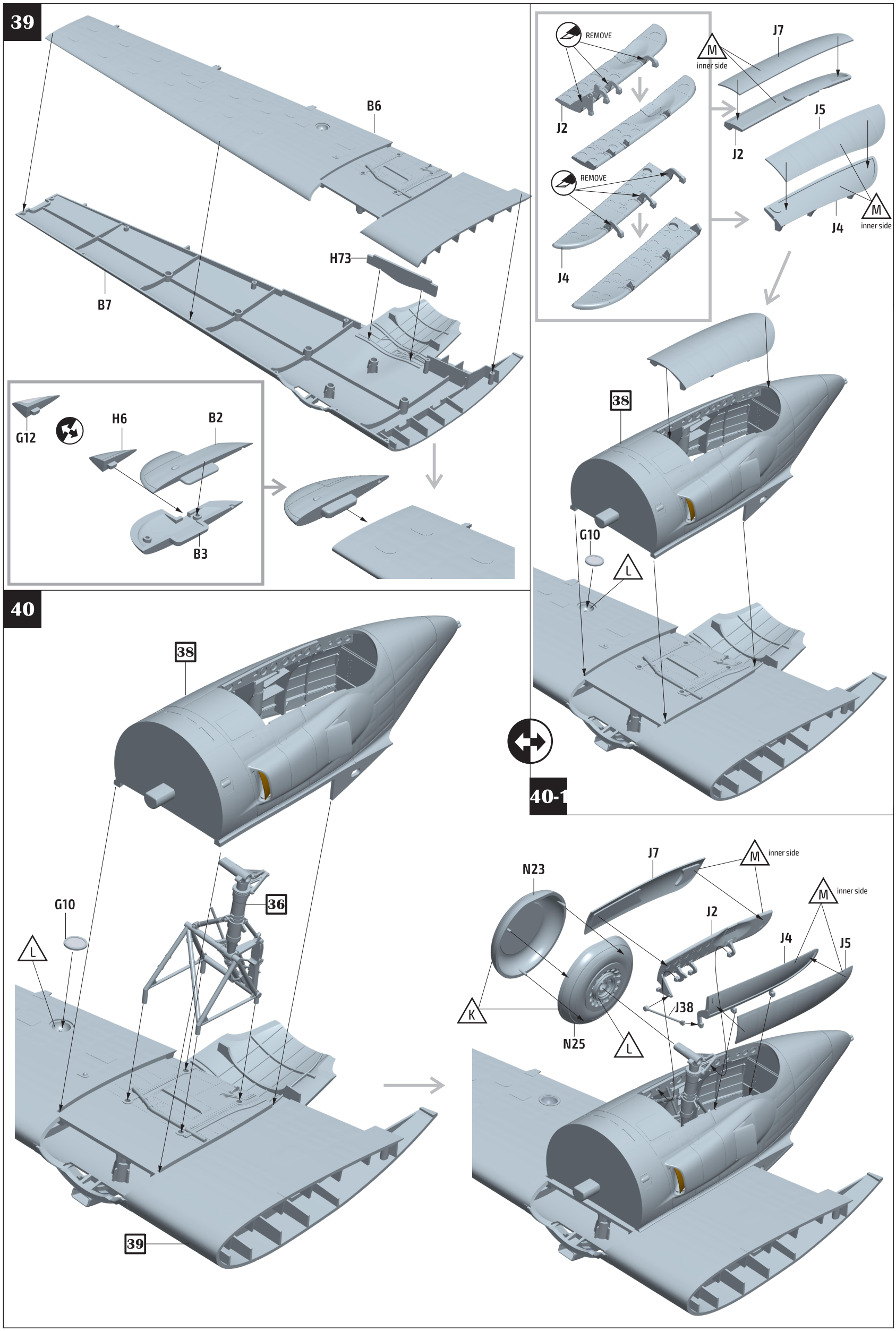
39
B6
B7
H73
G12
H6
B2
B3
REMOVE
J2
REMOVE
J4
M
inner side
J7
J2
J5
J4
M
inner side
38
G10
L
40-1
38
G10
L
36
39
N23
J7
M
inner side
M
inner side
J2
J4
J5
J38
K
N25
L

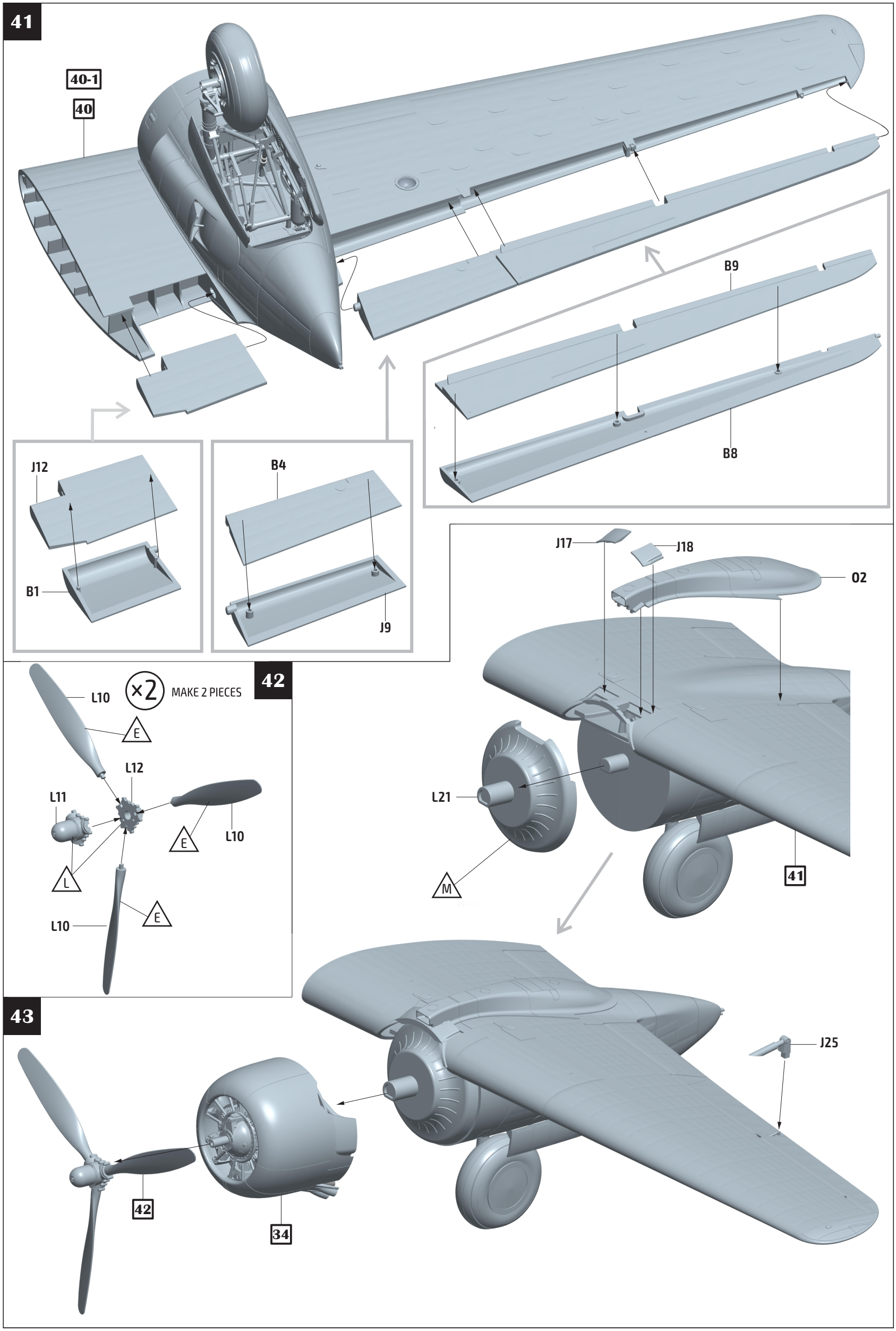
41
40-1
40
B9
B8
J12
B1
B4
J9
J17
J18
O2
L21
M
41
42
L10
×2
MAKE 2 PIECES
E
L12
L11
L
L10
E
L10
E
43
J25
42
34

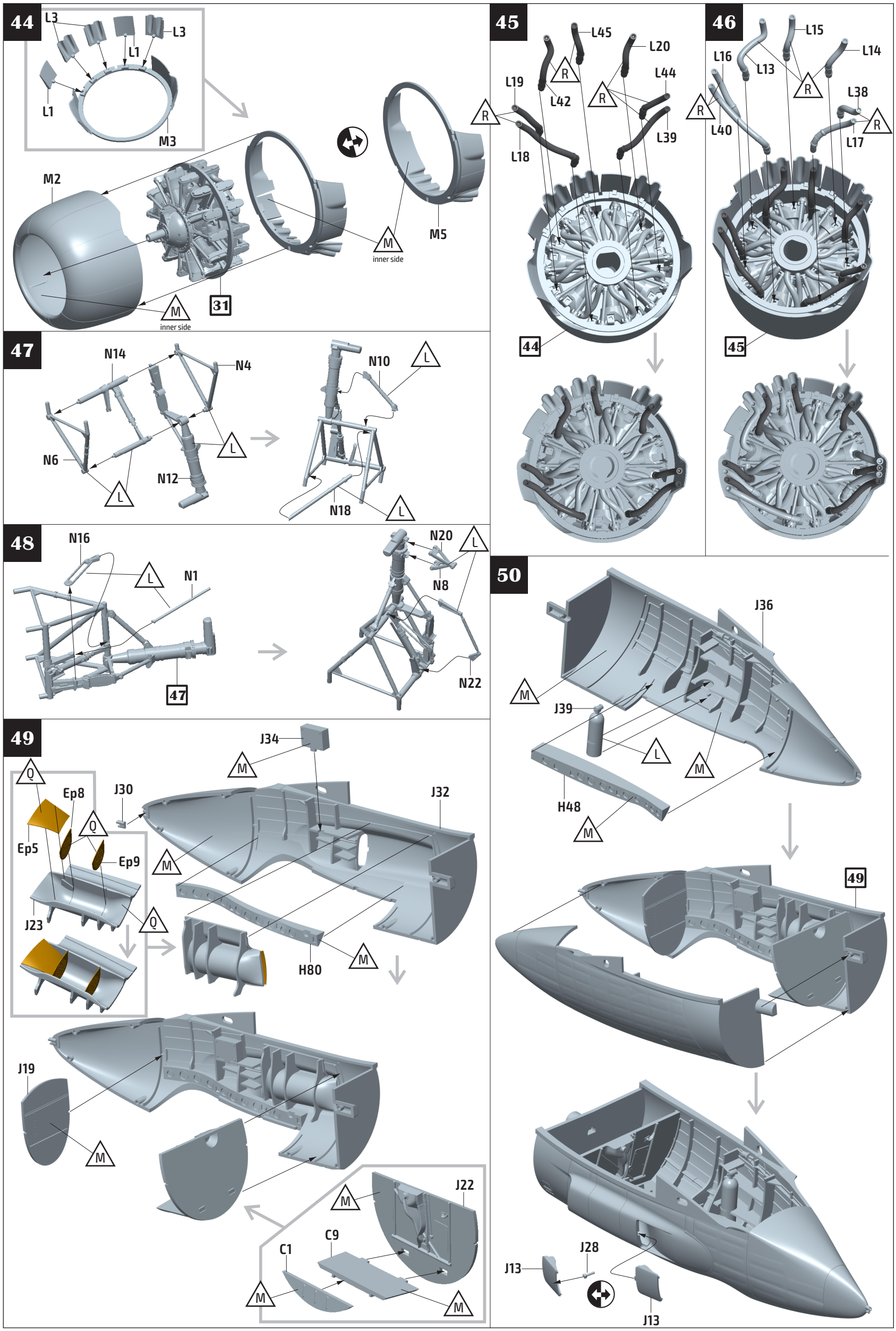
44
L3
L3
L1
L1
M3
M2
M
inner side
M5
M
inner side
31
45
L45
L20
L44
L19
L42
L39
L18
44
46
L15
L14
L16
L13
L38
L40
L17
45
47
N14
N4
N10
L
N6
L
N12
L
N18
L
48
N16
L
N1
47
N20
L
N8
N22
49
J34
M
Q
Ep8
J30
J32
Q
Ep5
Ep9
M
J23
Q
H80
M
J19
M
J22
M
C9
C1
M
M
50
J36
M
J39
L
M
H48
M
49
J28
J13
J13

51

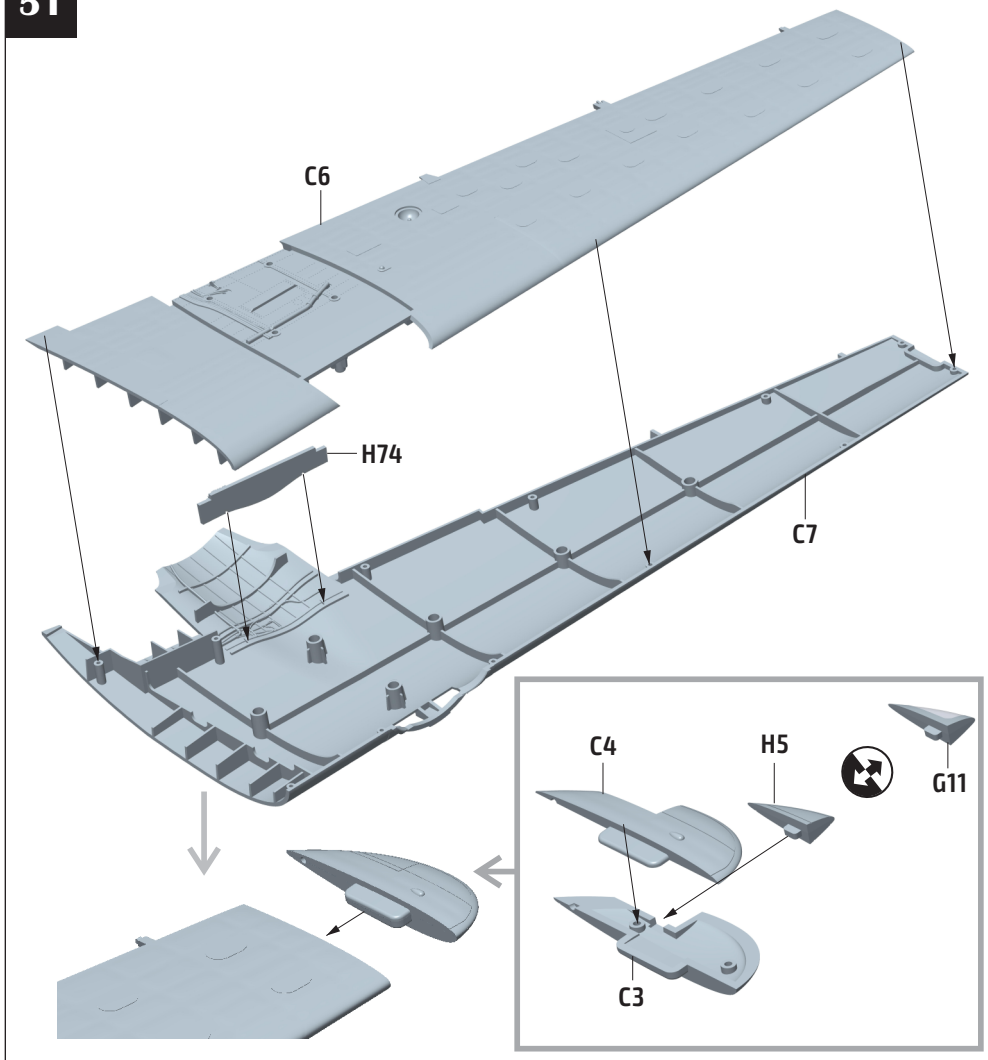
C6
H74
C7
C4
H5
G11
C3

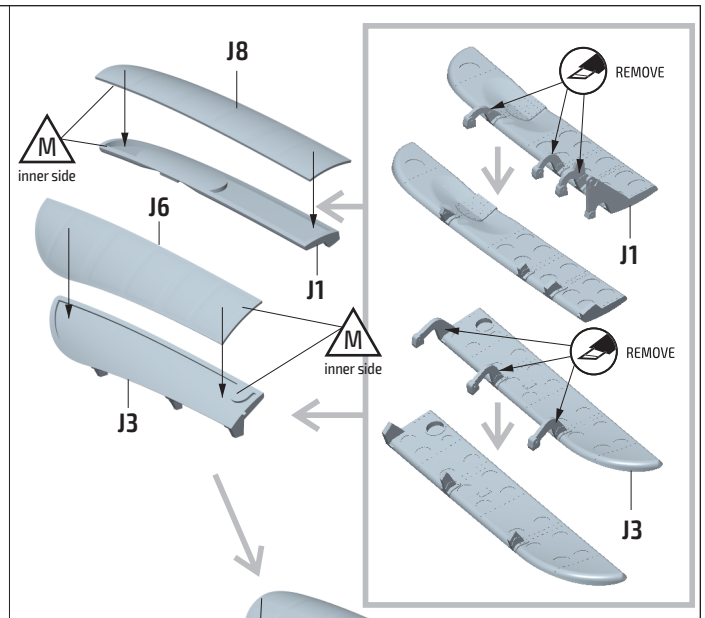
J8
M
inner side
J6
J1
M
inner side
J3
REMOVE
J1
REMOVE
J3

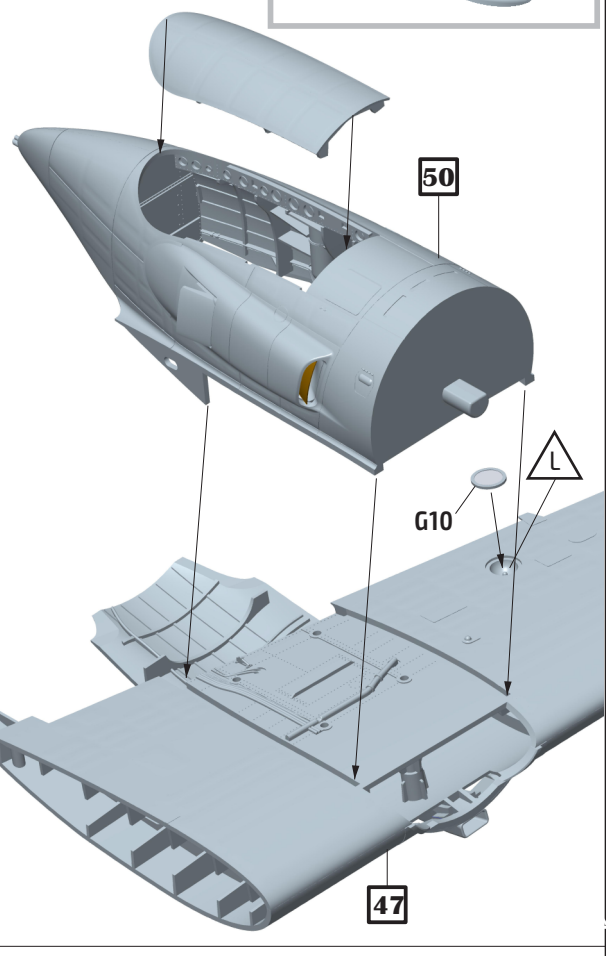
50
L
G10
47

52

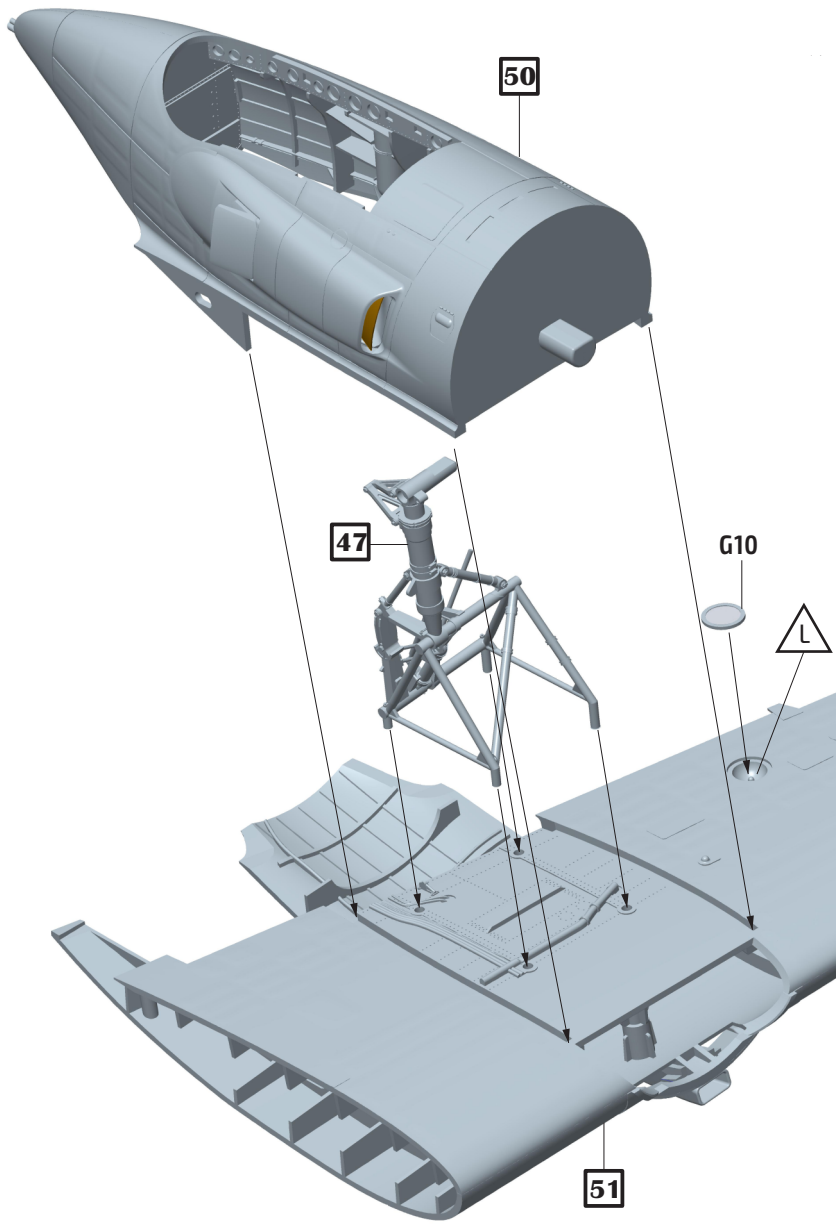
50
47
G10
L
51

53

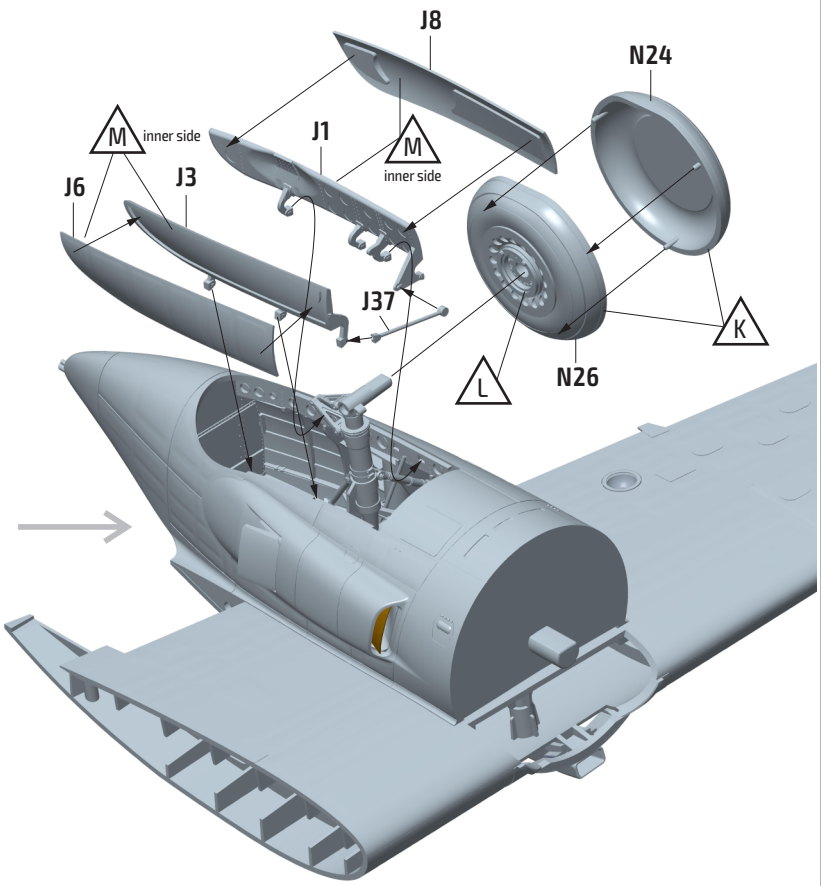
J8
N24
M
inner side
J1
M
inner side
J6
J3
J37
K
L
N26

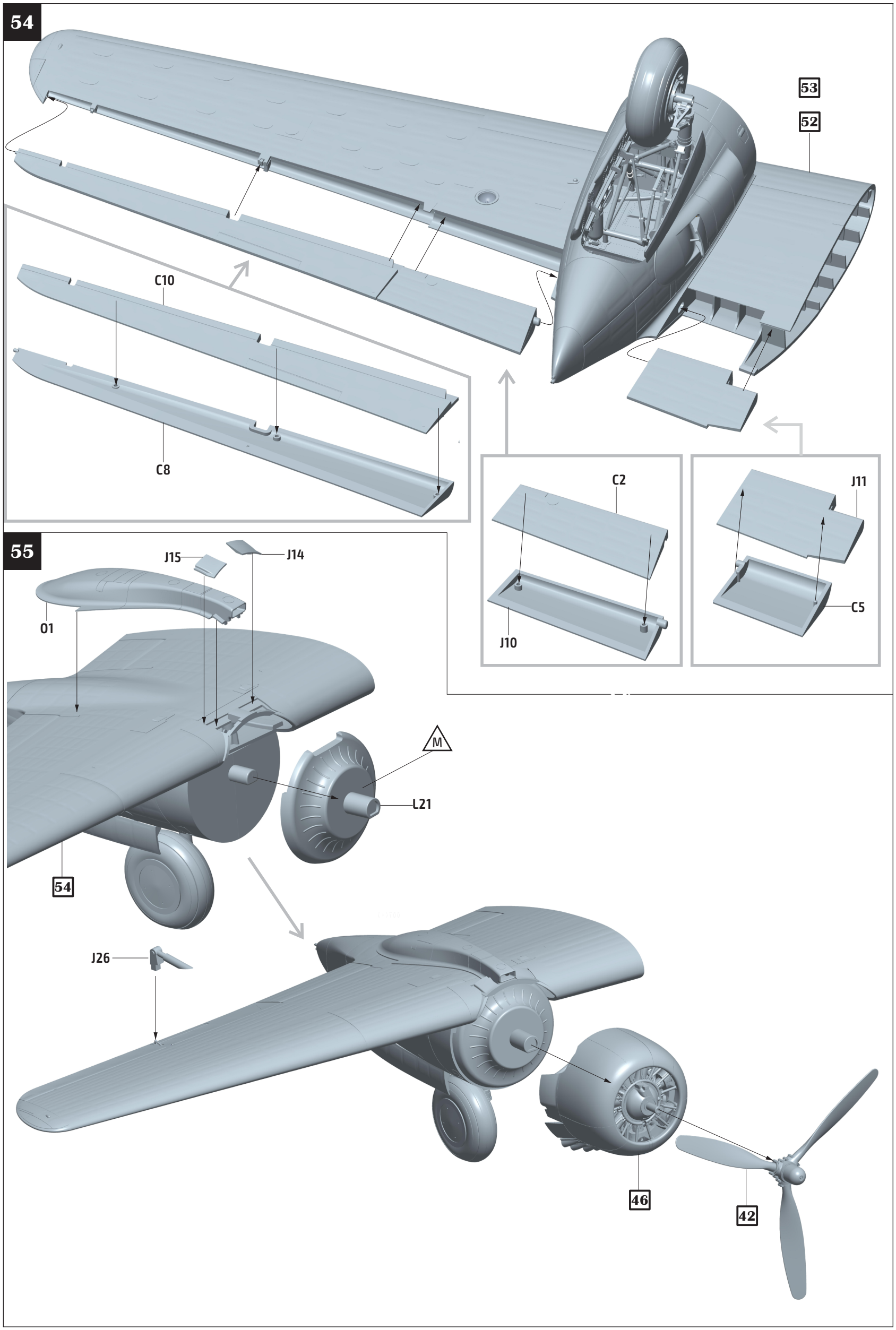
54
53
52
C10
C8
C2
J10
J11
C5
55
J15
J14
01
M
L21
54
J26
46
42

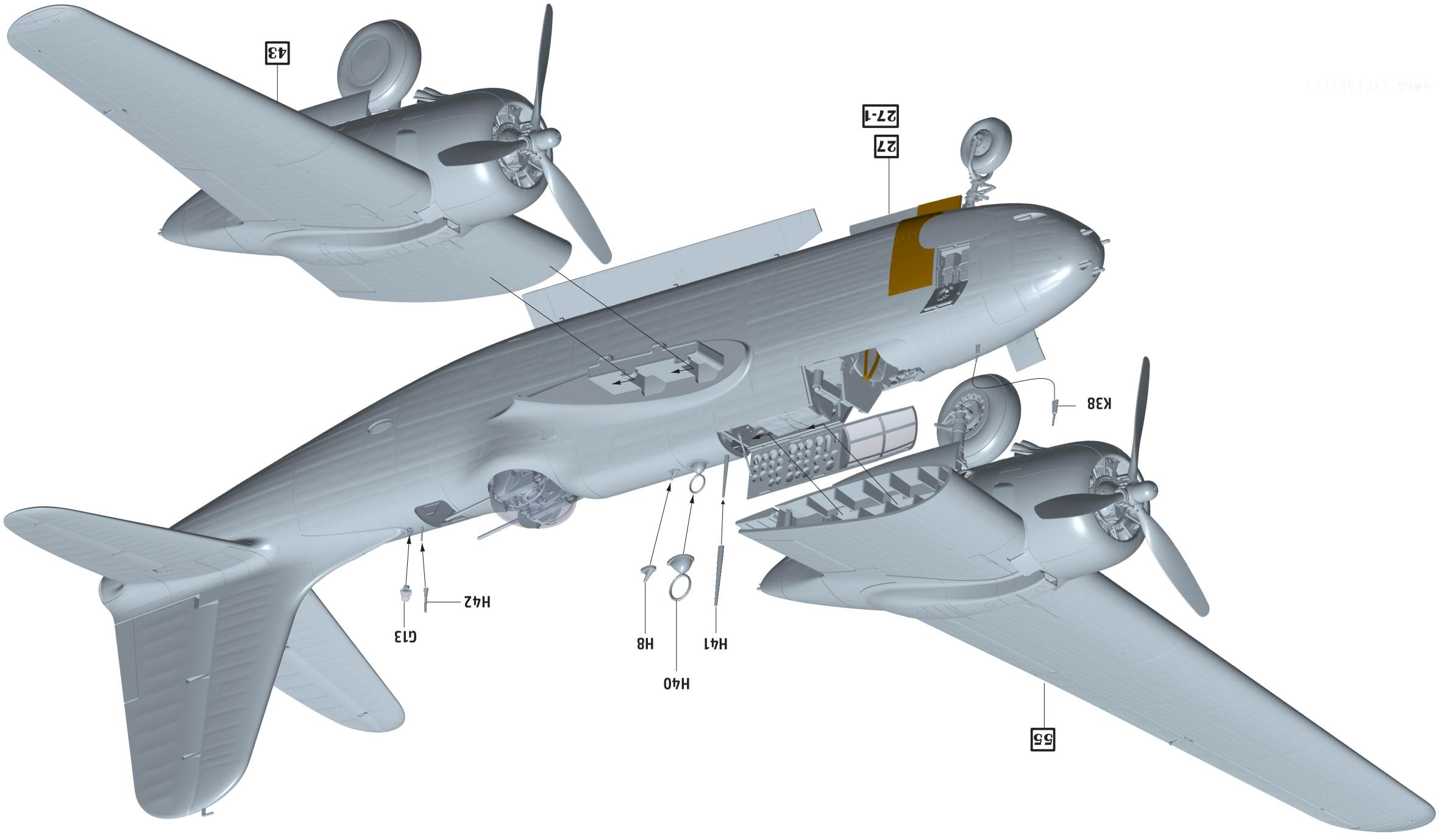
55
H40
H41
H8
G13
H42
K38
27
27-1
43

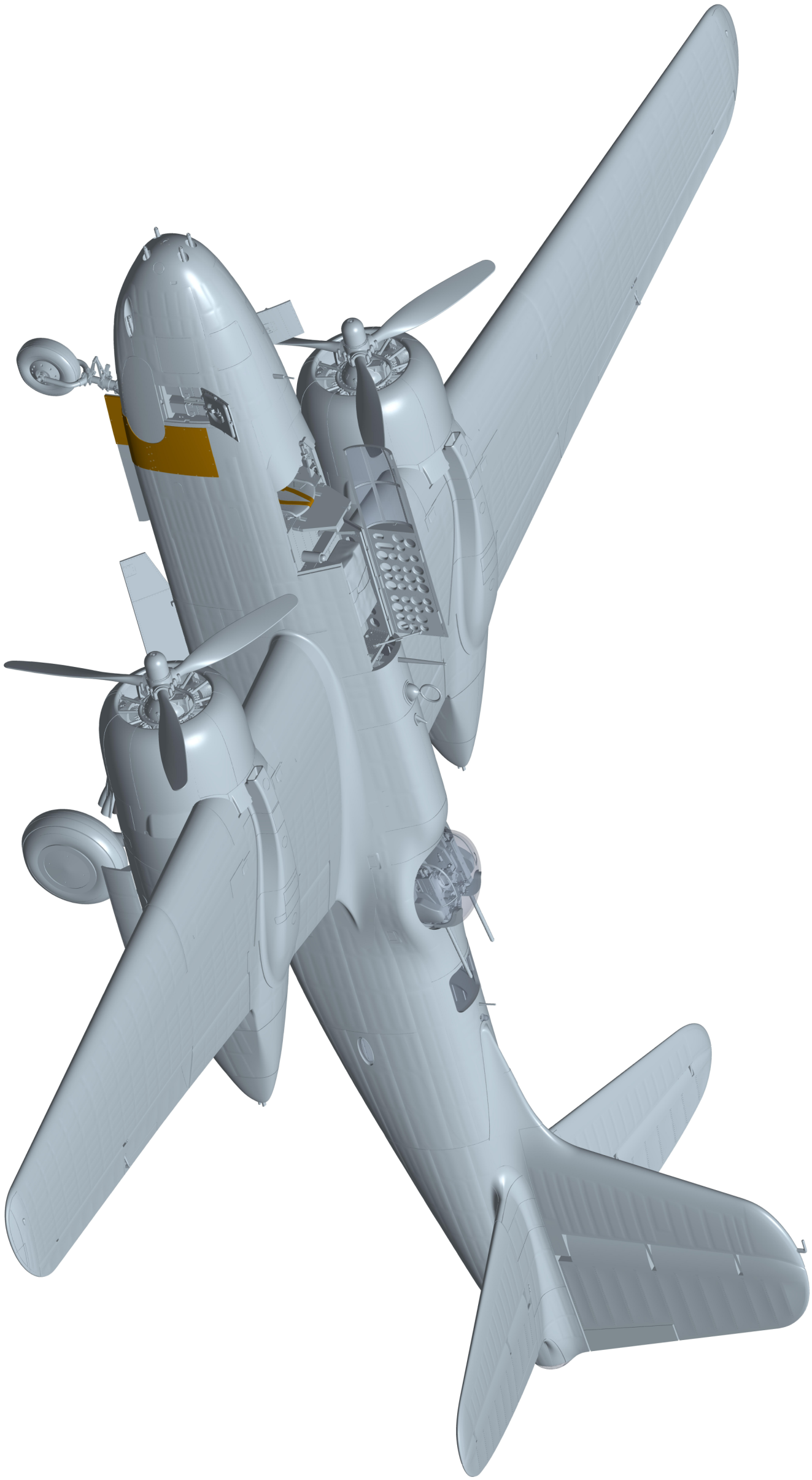

Parts

A PART

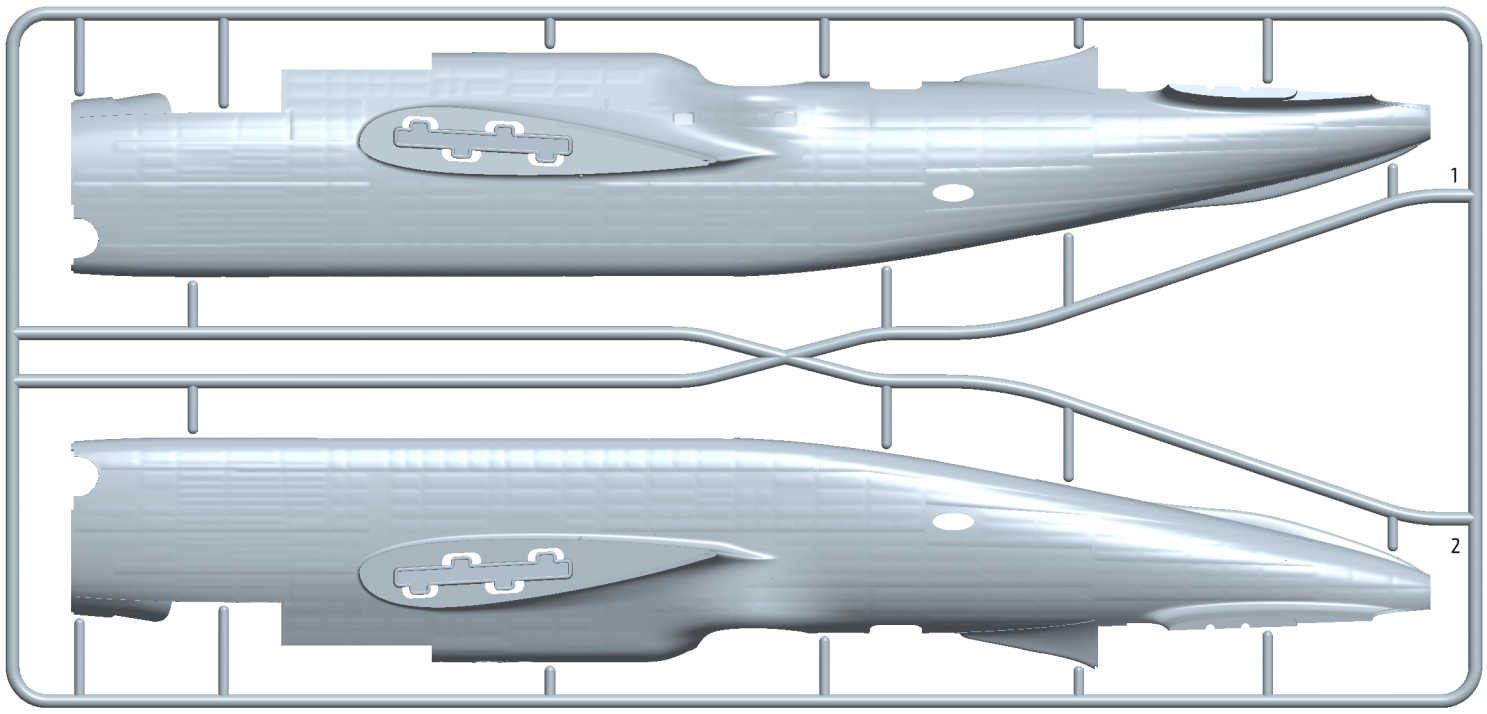

B PART

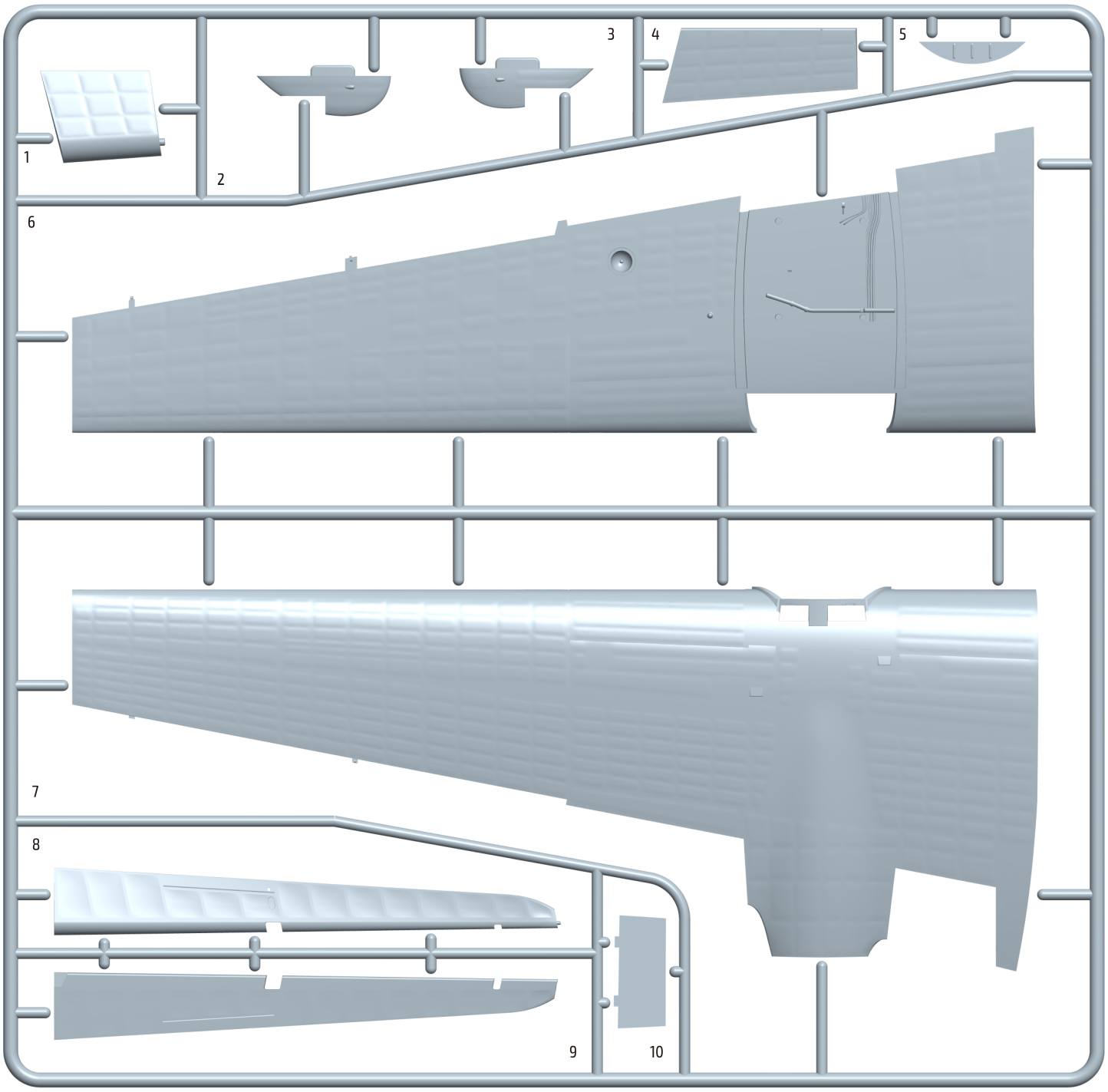

Parts

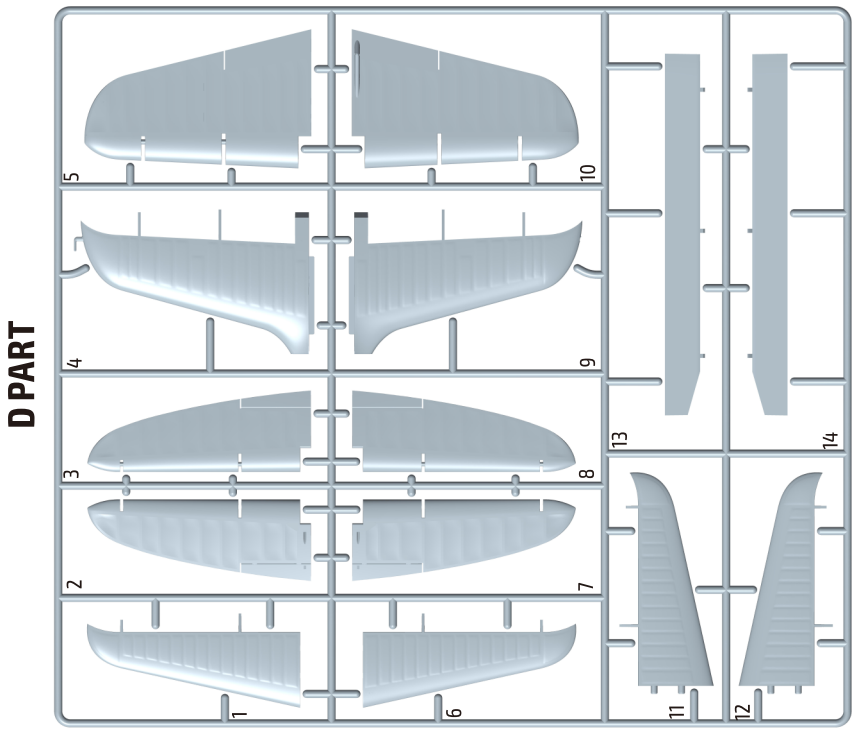
D PART
1
2
3
4
5
6
7
8
9
10
11
12
13
14

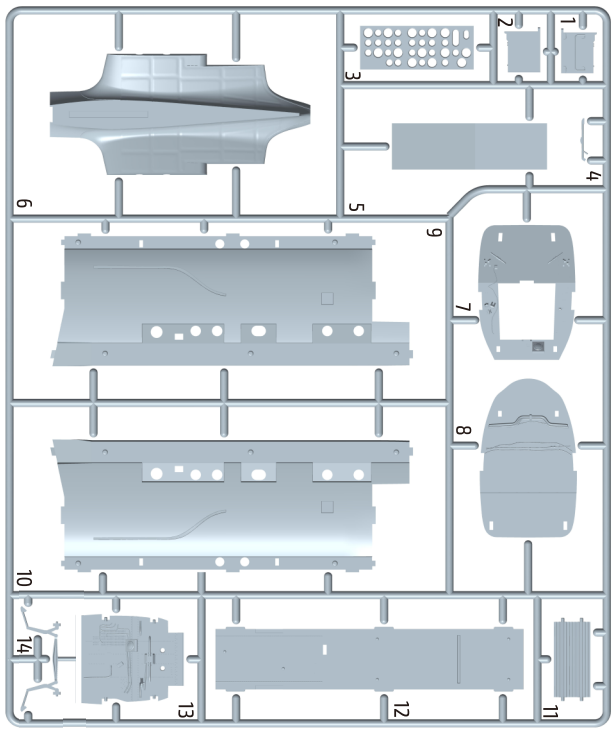
E PART
1
2
3
4
5
6
7
8
9
10
11
12
13
14

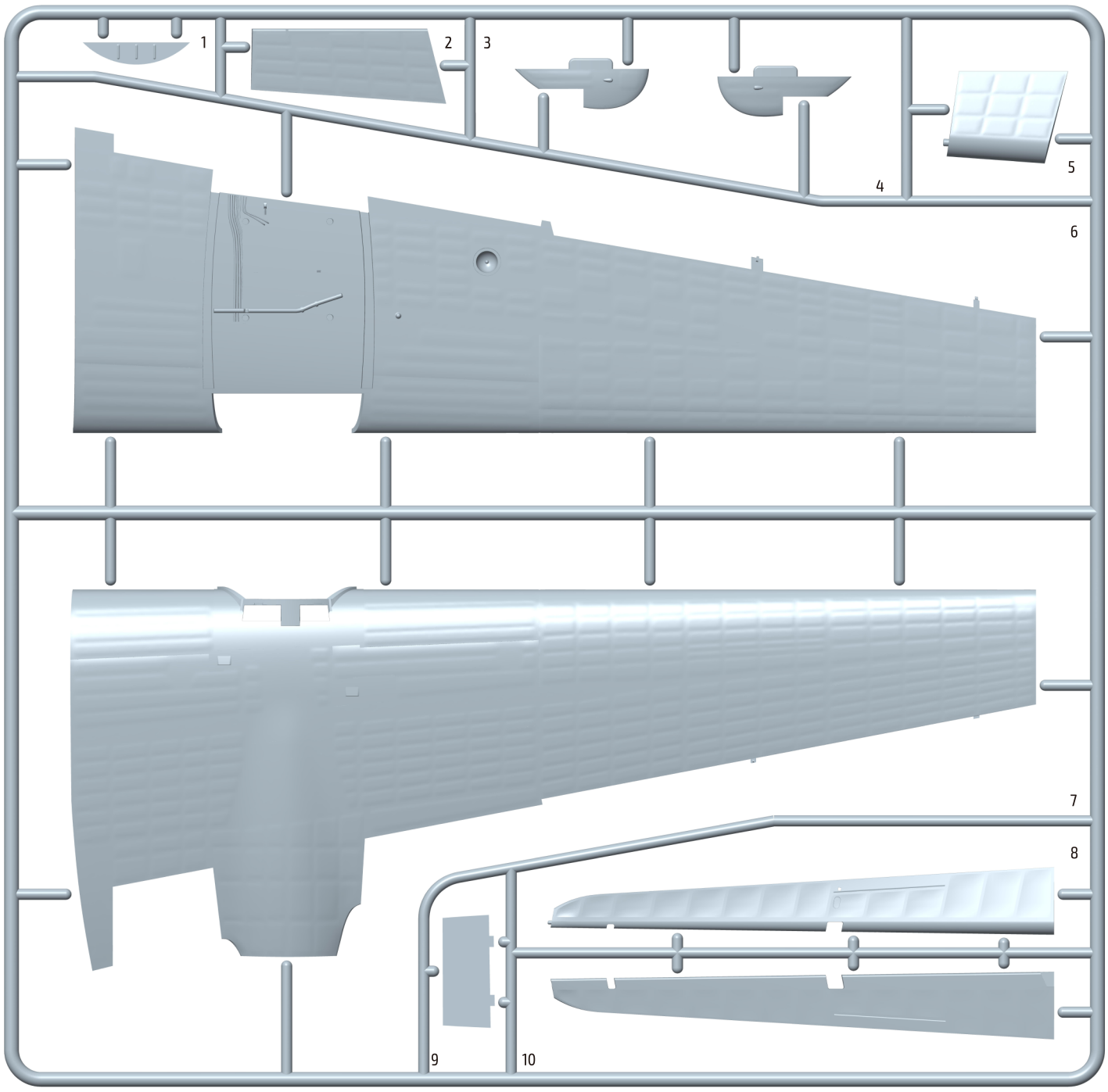
C PART
1
2
3
4
5
6
7
8
9
10

Parts

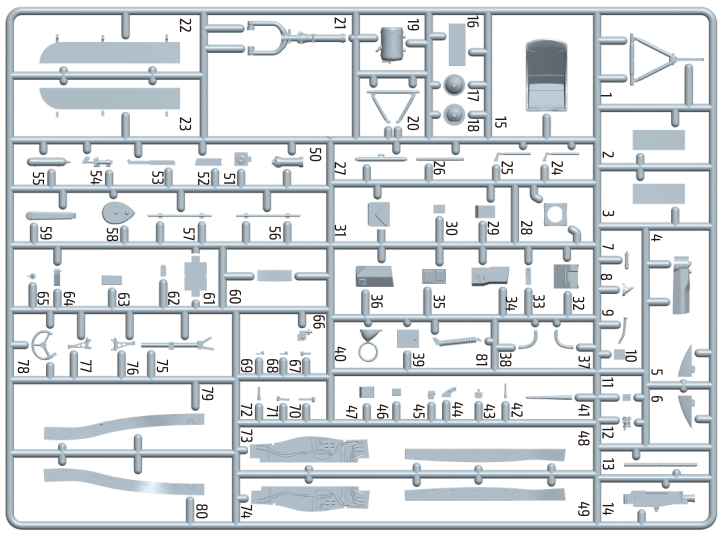

H PART

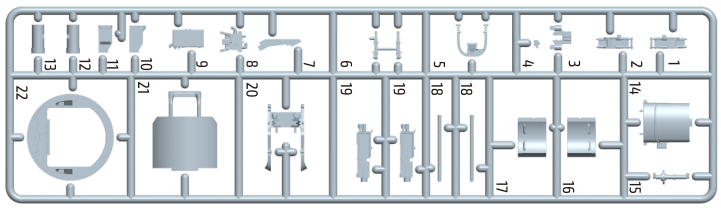

I PART

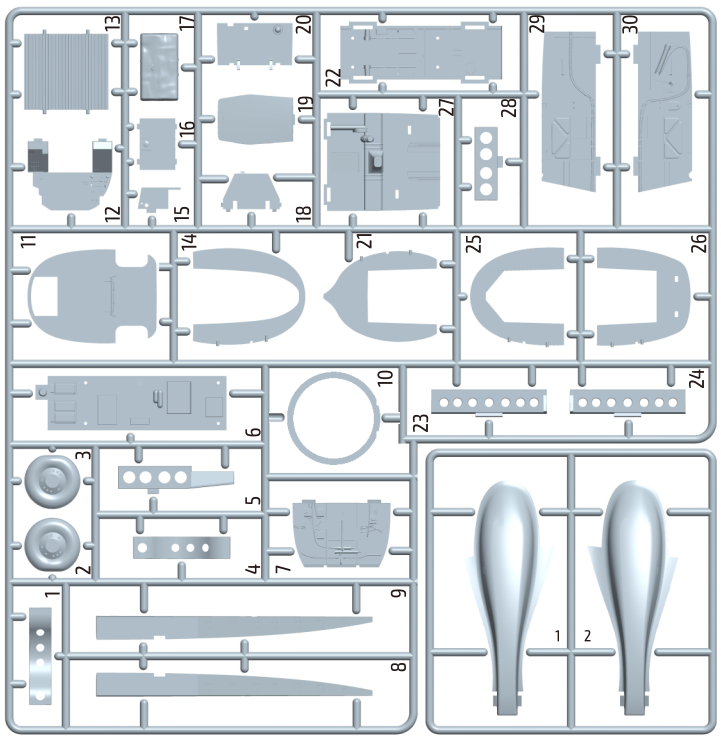

F PART

O PART

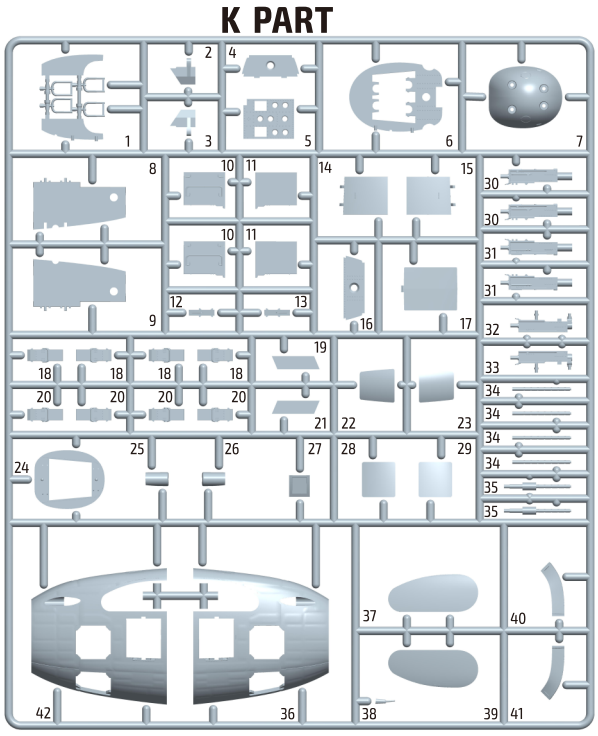

K PART

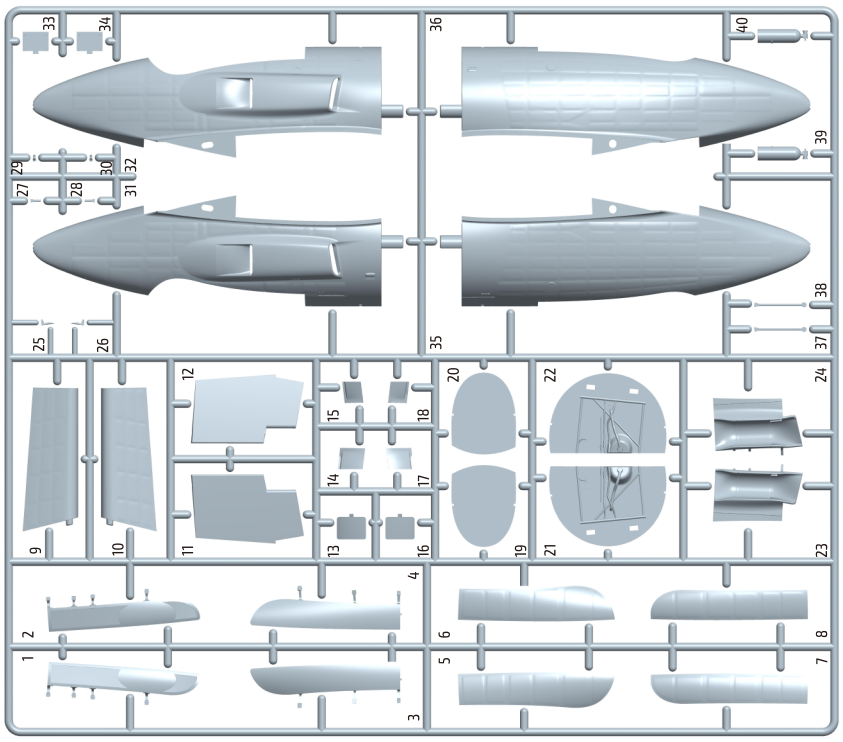

J PART

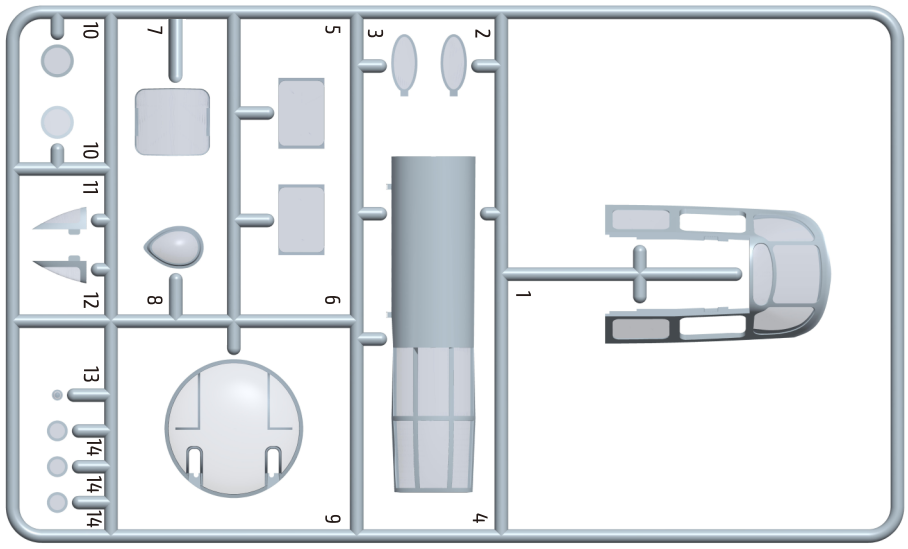

G PART

Photo-etched Parts

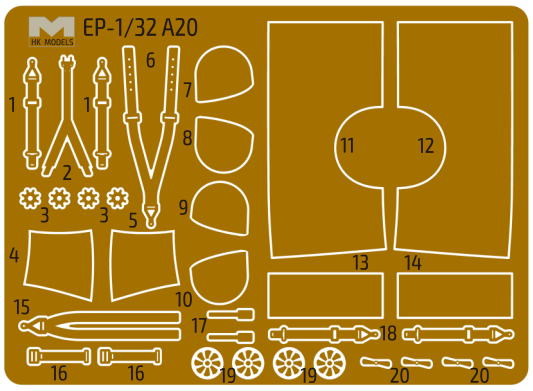

1/32 A20
W1

1/32 A20
W2

Parts

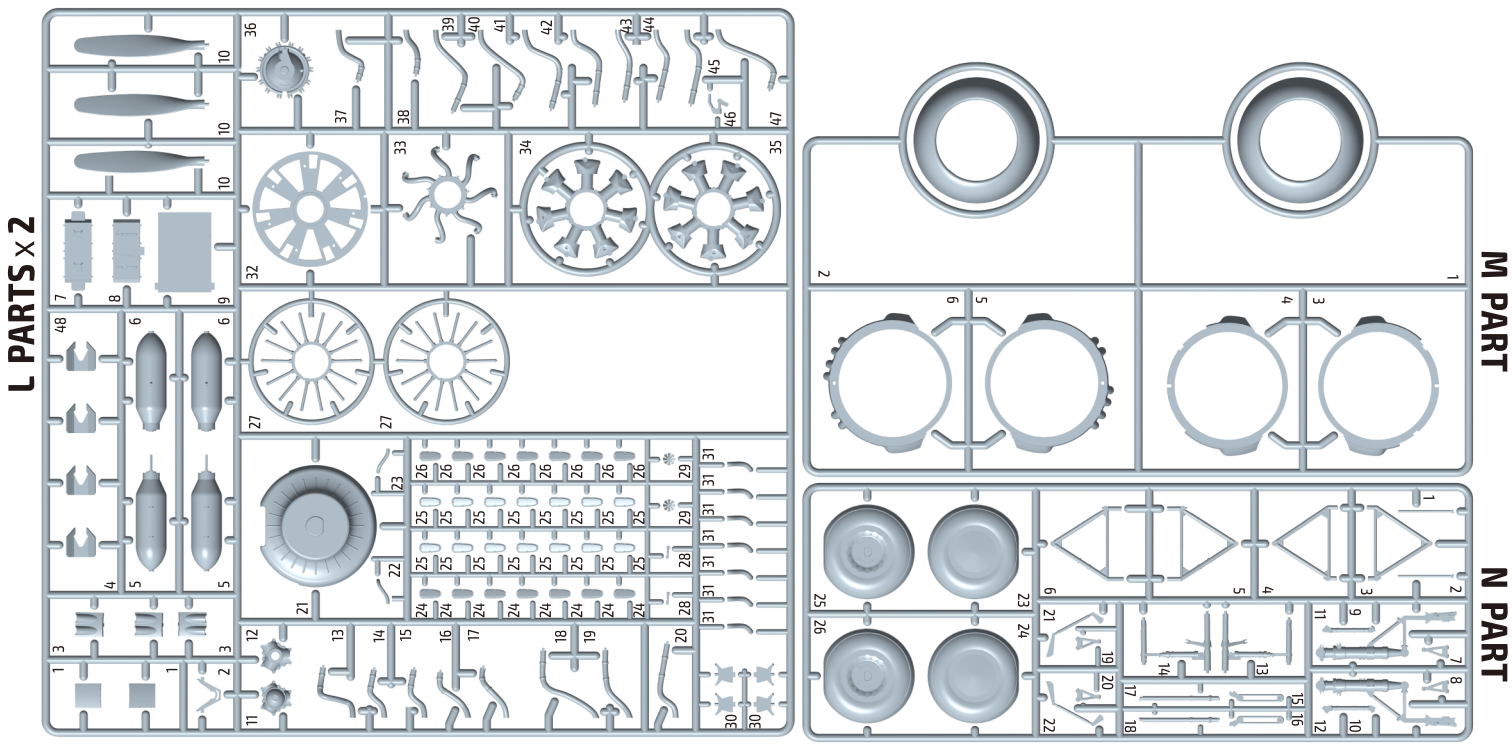

Decals

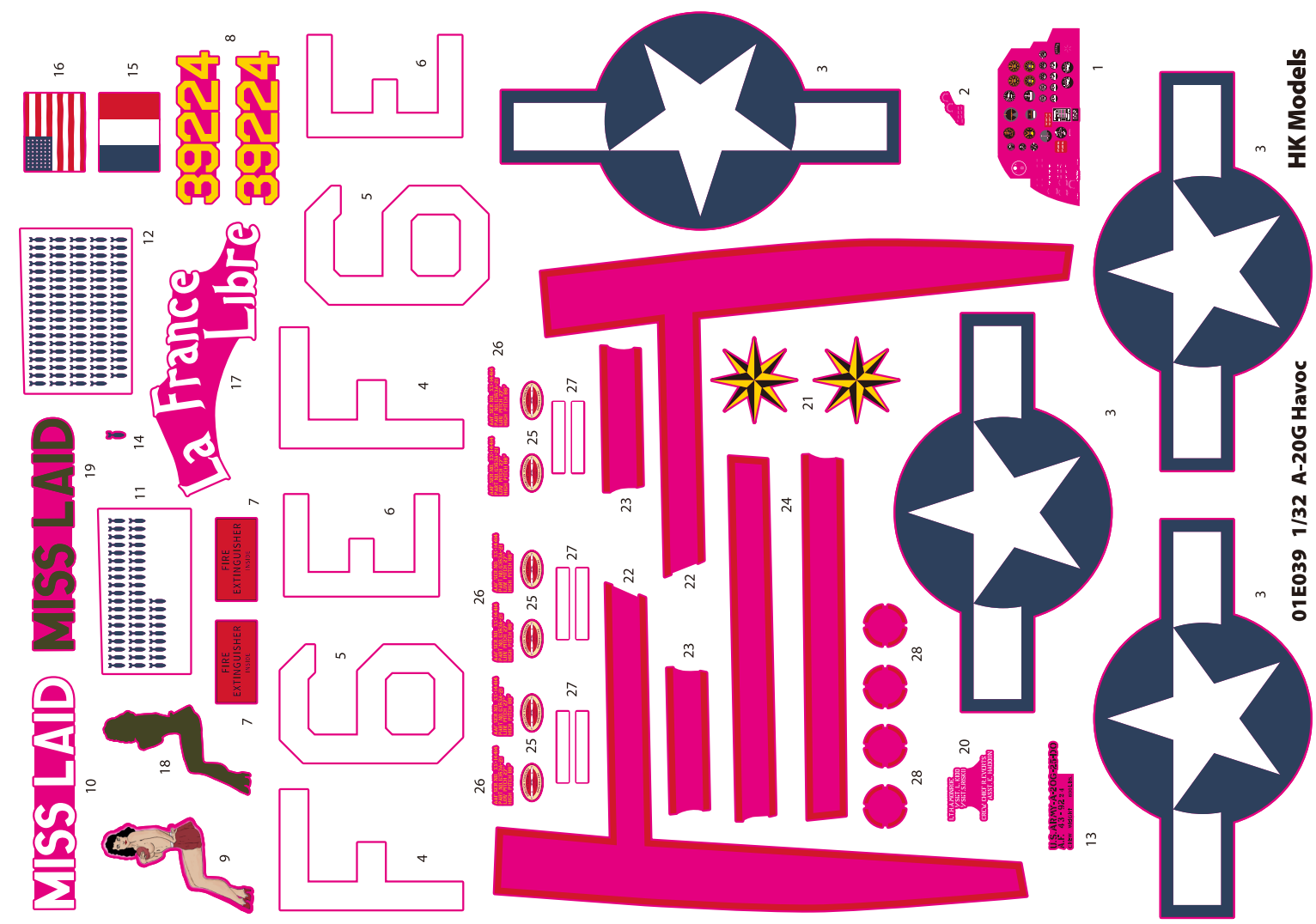

MARKING A — A-20G-25-DO, s/n 43-9224, 670th BS/416th BG, Wethersfield, UK, 20th June 1944

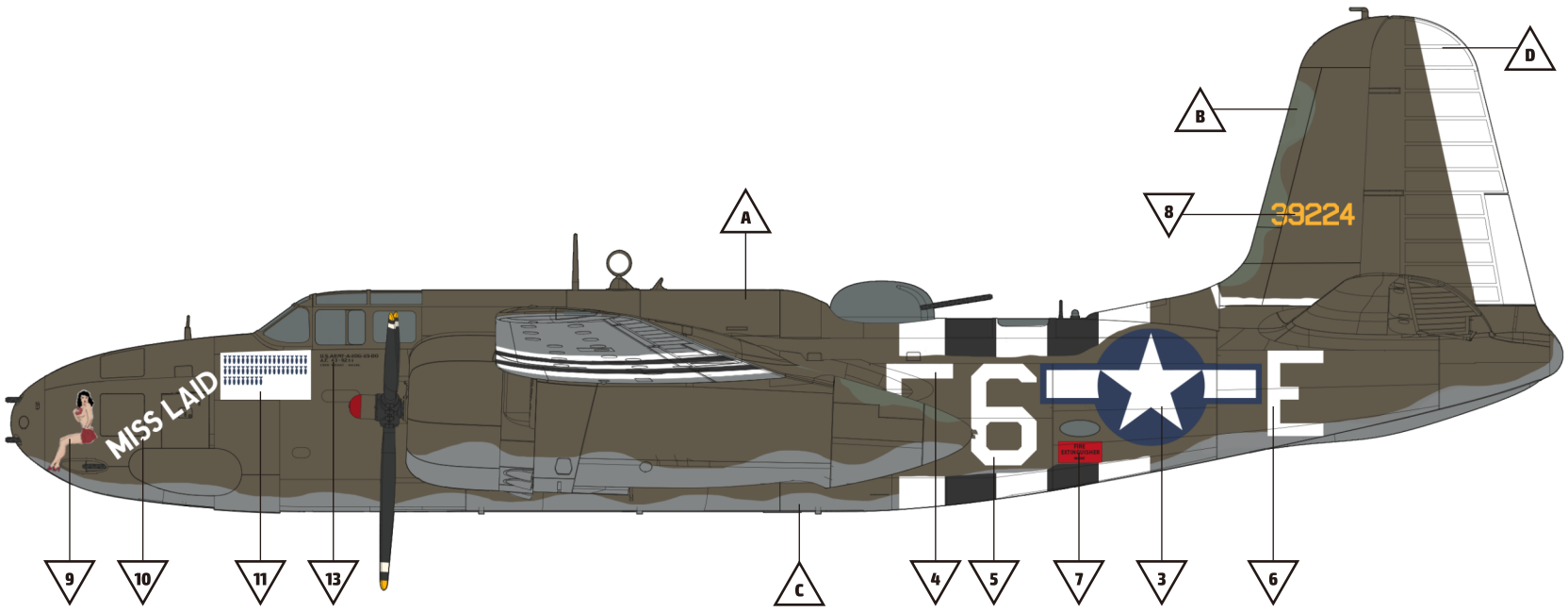

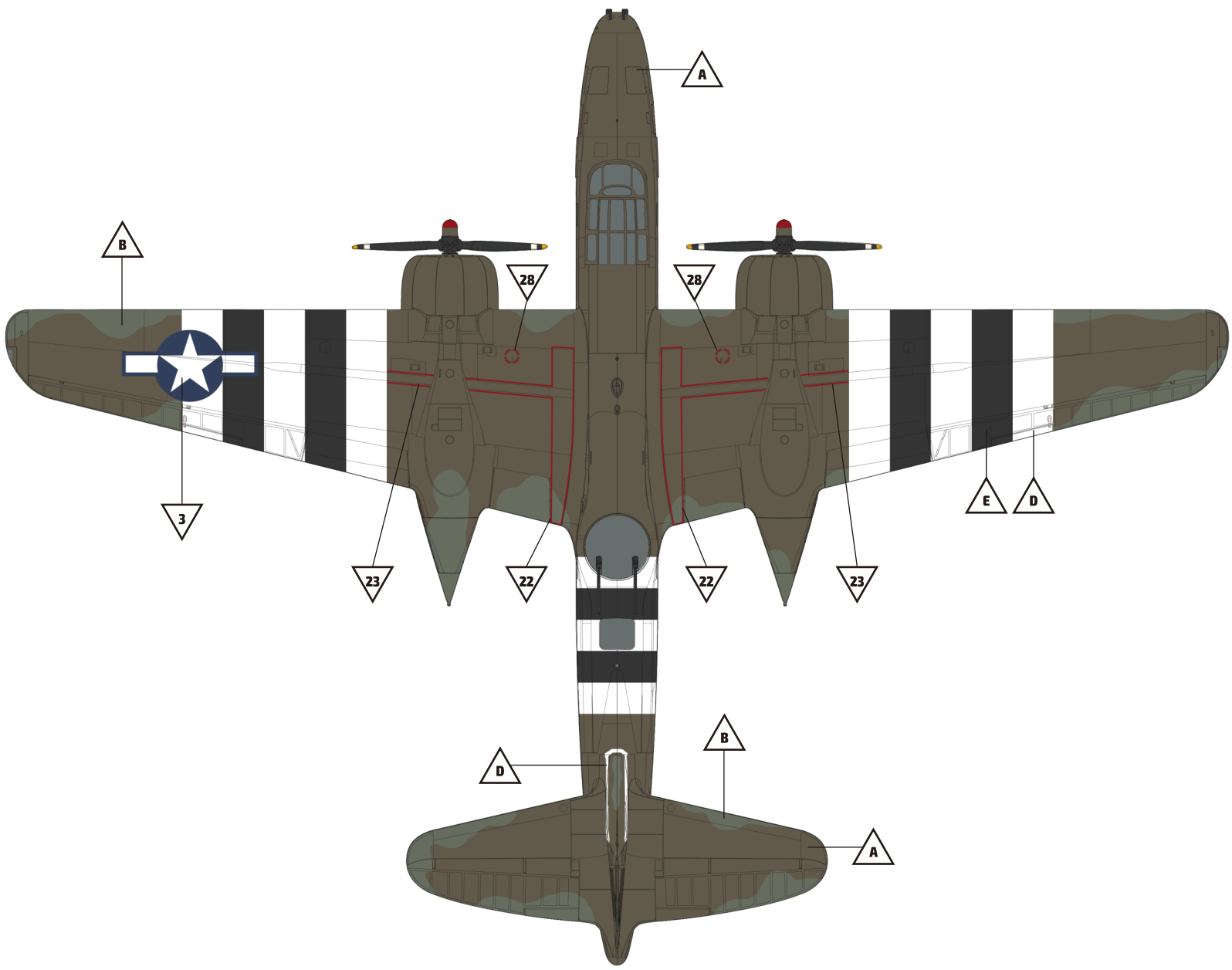

MARKING A — A-20G-25-DO, s/n 43-9224, 670th BS/416th BG, Wethersfield, UK, 20th June 1944

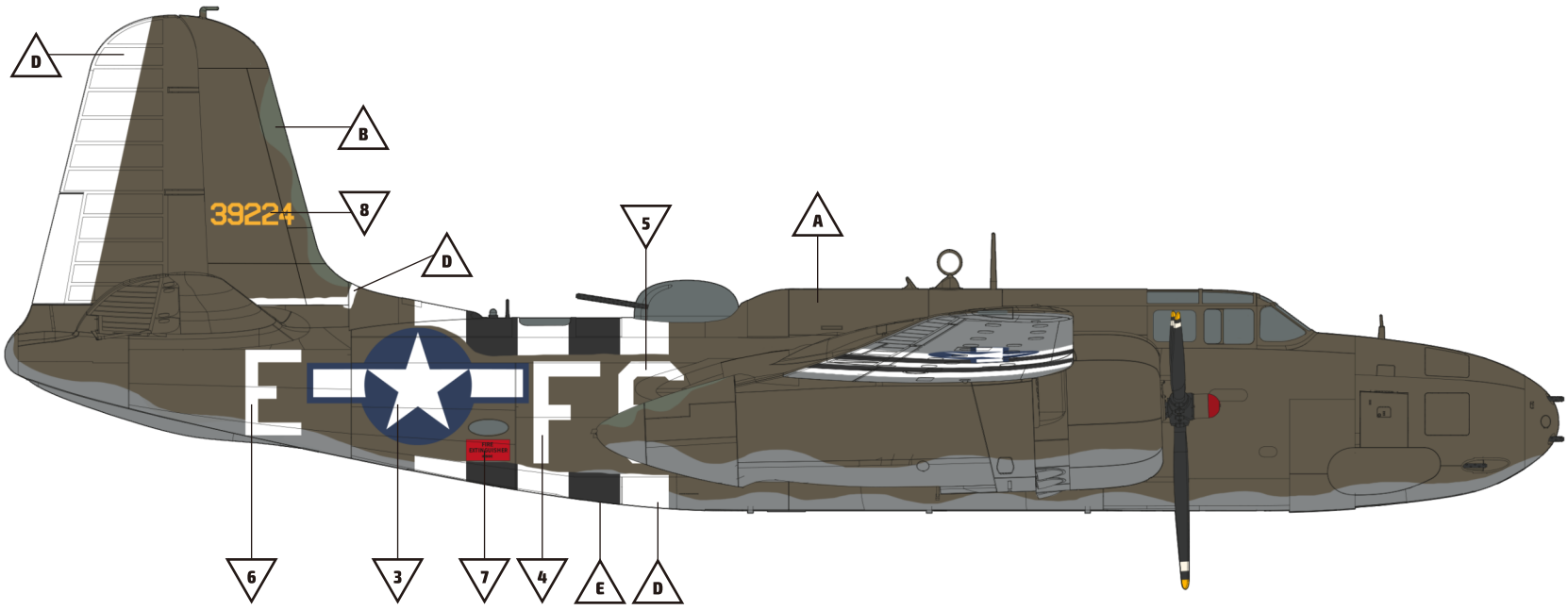

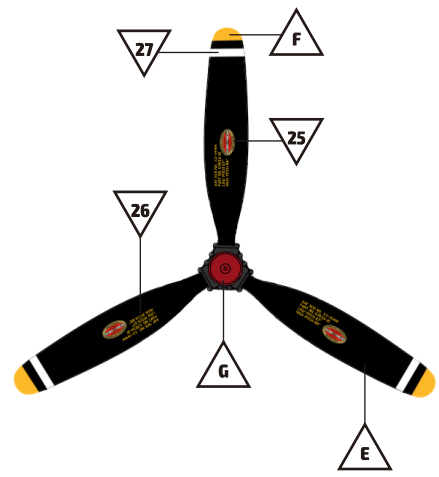

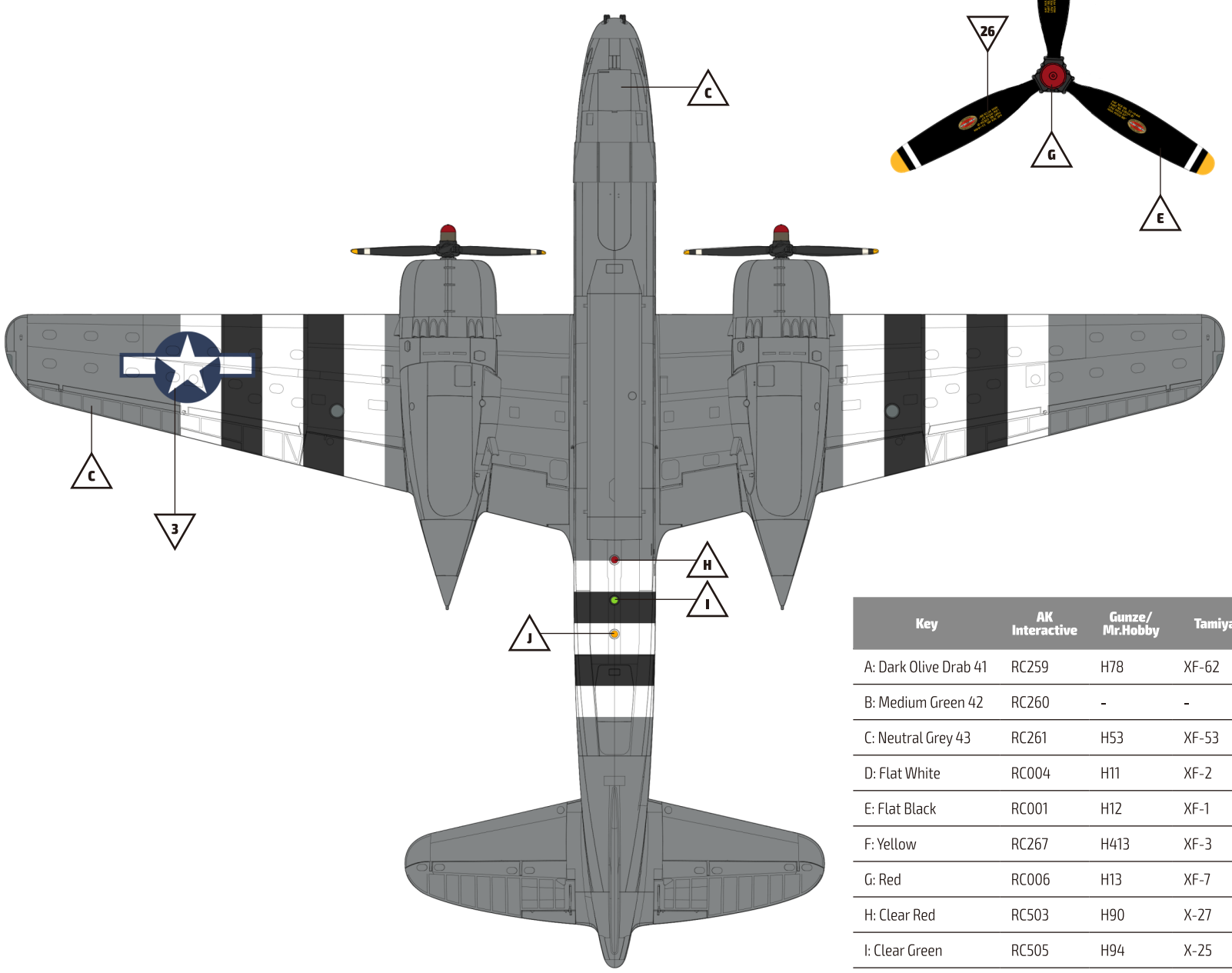

Key	AK Interactive	Gunze/ Mr.Hobby	Tamiya
A: Dark Olive Drab 41	RC259	H78	XF-62
B: Medium Green 42	RC260	-	-
C: Neutral Grey 43	RC261	H53	XF-53
D: Flat White	RC004	H11	XF-2
E: Flat Black	RC001	H12	XF-1
F: Yellow	RC267	H413	XF-3
G: Red	RC006	H13	XF-7
H: Clear Red	RC503	H90	X-27
I: Clear Green	RC505	H94	X-25
J: Clear Orange	RC506	H92	X-26

MARKING B

A-20G-25-DO, s/n 43-9224, 670th BS/416th BG, A-55 Melun/Villaroche, France, 5th October 1944

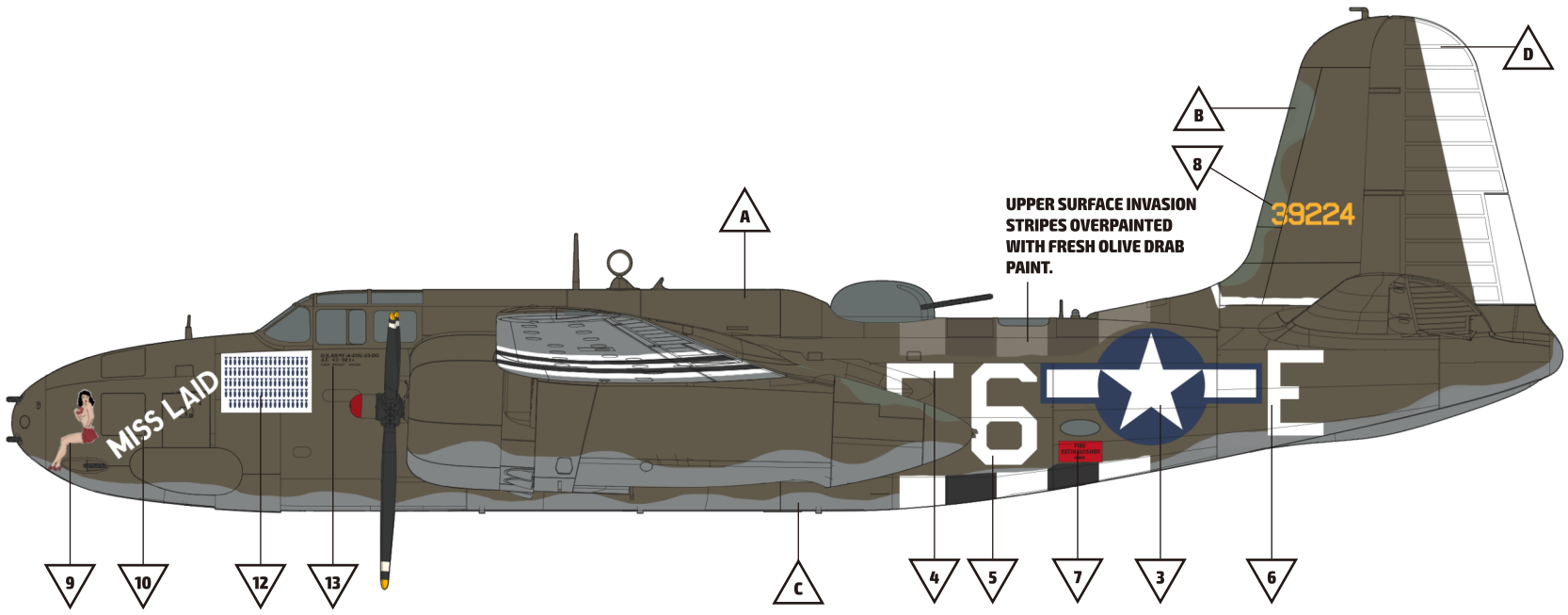

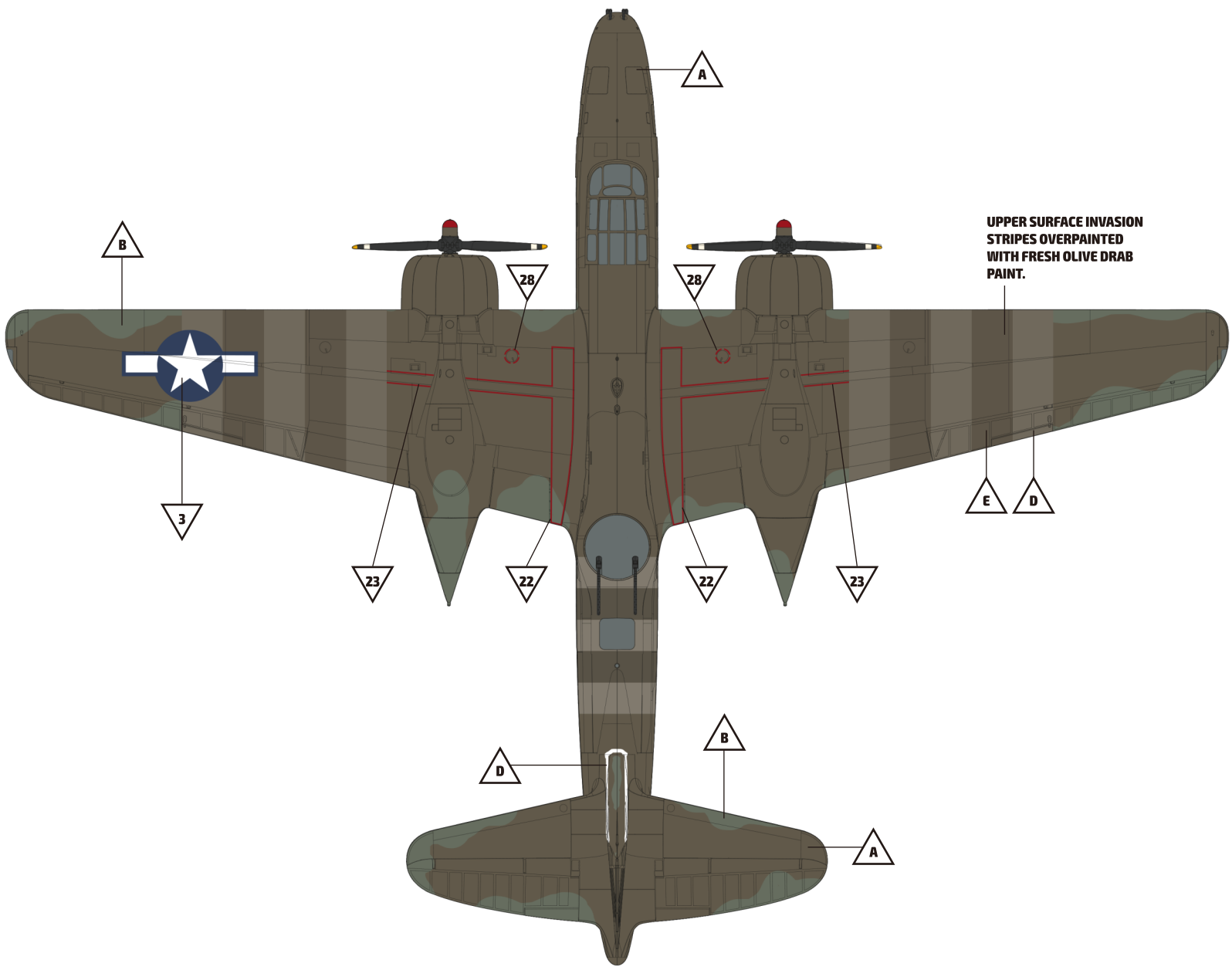

MARKING B

A-20G-25-DO, s/n 43-9224, 670th BS/416th BG, A-55 Melun/Villaroche, France, 5th October 1944

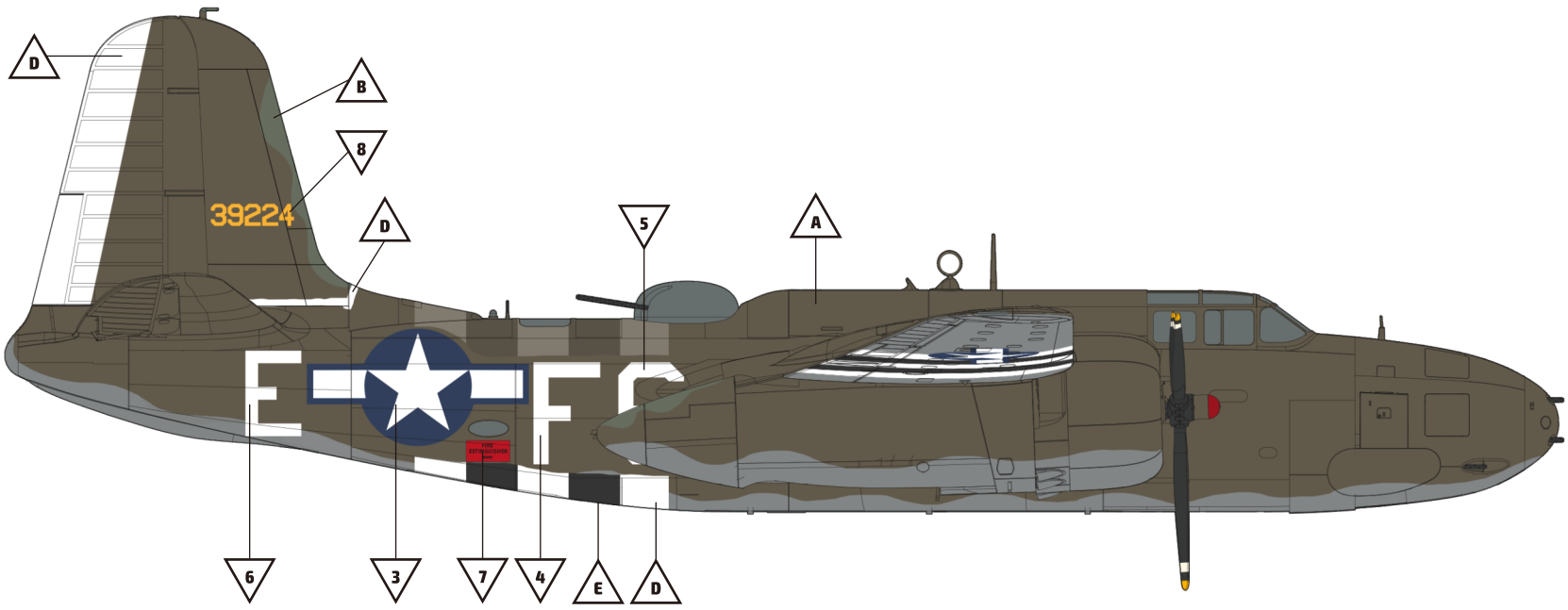

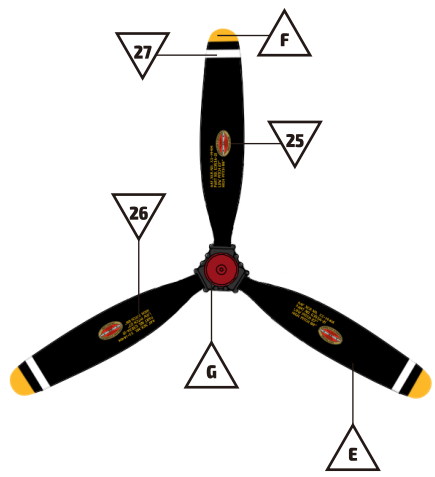

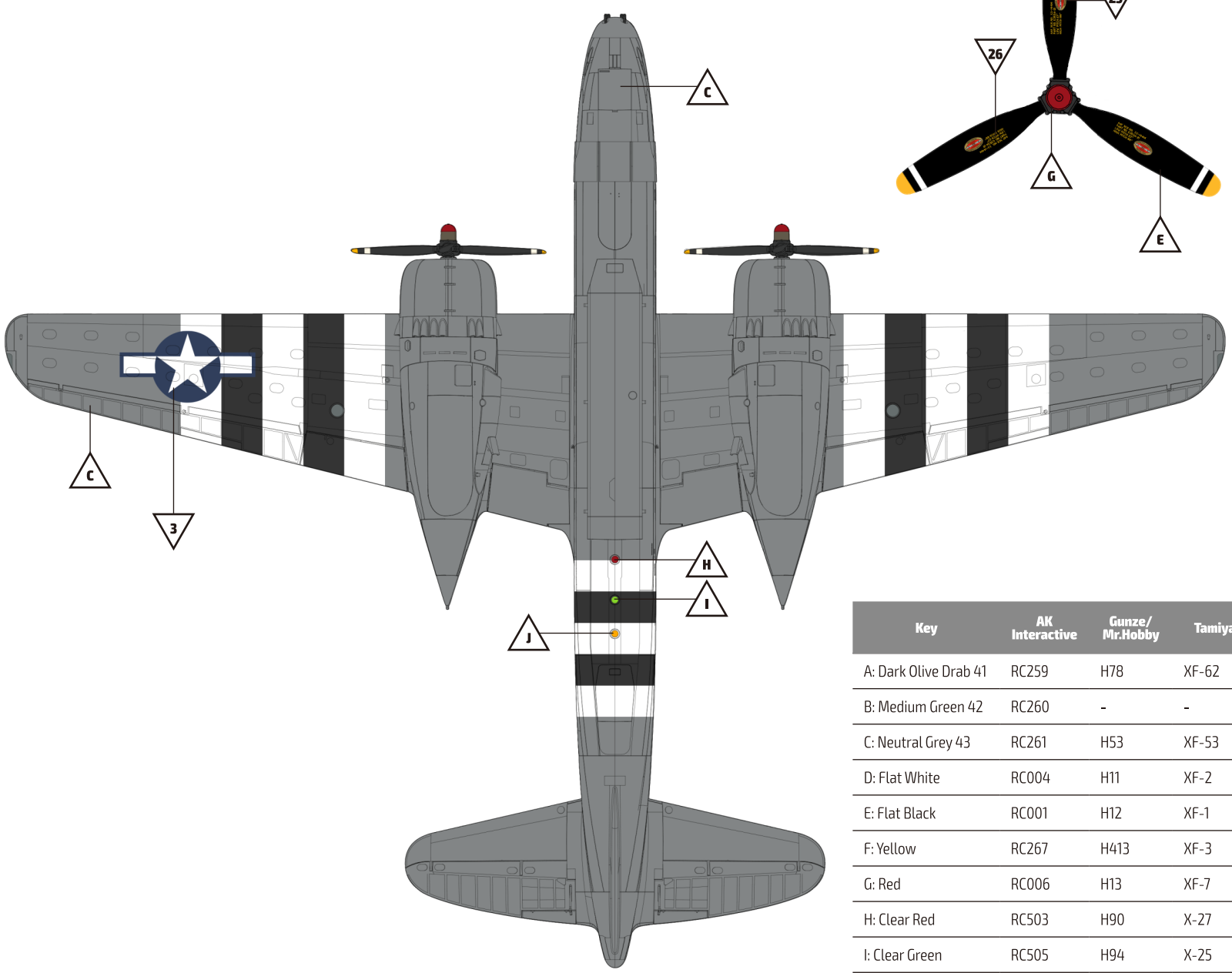

Key	AK Interactive	Gunze/ Mr.Hobby	Tamiya
A: Dark Olive Drab 41	RC259	H78	XF-62
B: Medium Green 42	RC260	-	-
C: Neutral Grey 43	RC261	H53	XF-53
D: Flat White	RC004	H11	XF-2
E: Flat Black	RC001	H12	XF-1
F: Yellow	RC267	H413	XF-3
G: Red	RC006	H13	XF-7
H: Clear Red	RC503	H90	X-27
I: Clear Green	RC505	H94	X-25
J: Clear Orange	RC506	H92	X-26

MARKING C — A-20G-25-DO, s/n 43-9224, 670th BS/416th BG, Paris, France, 4th November 1944

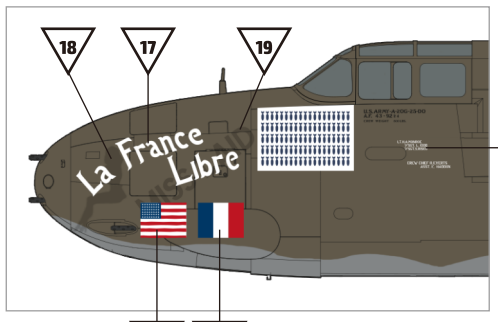

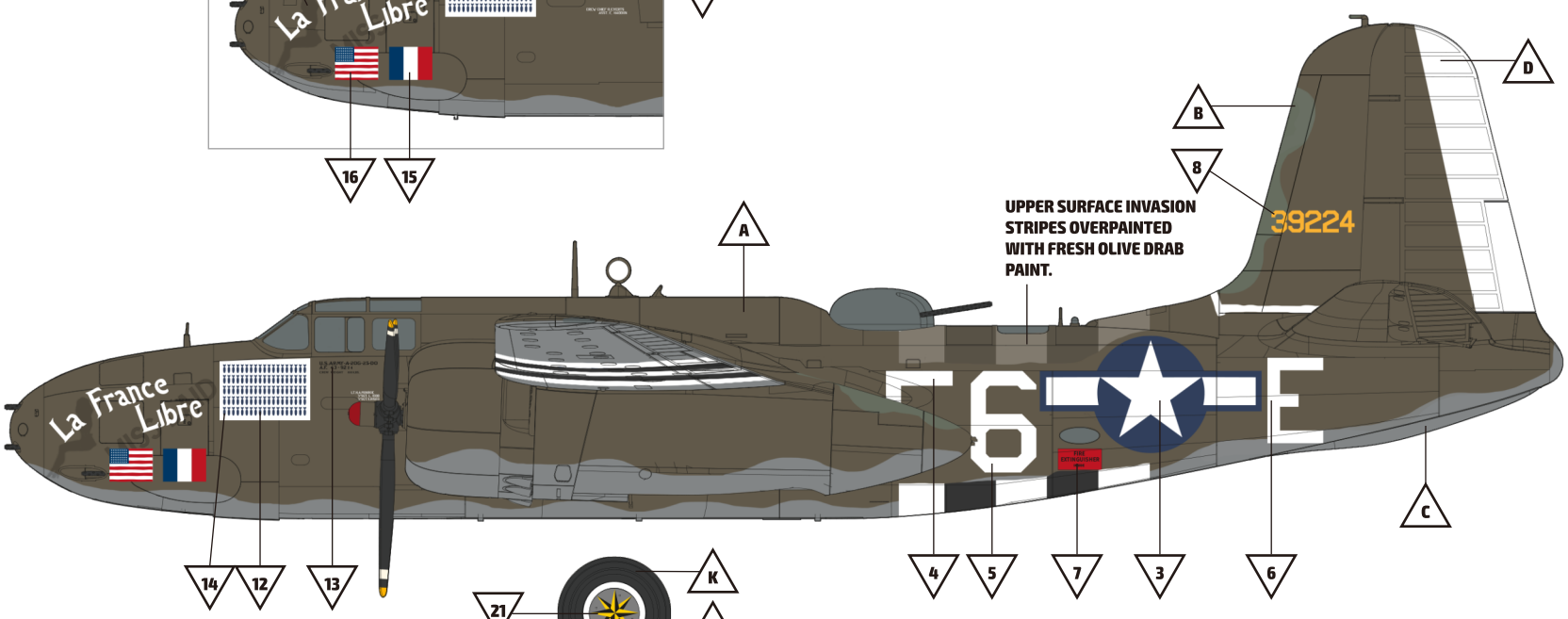

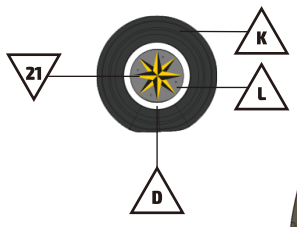

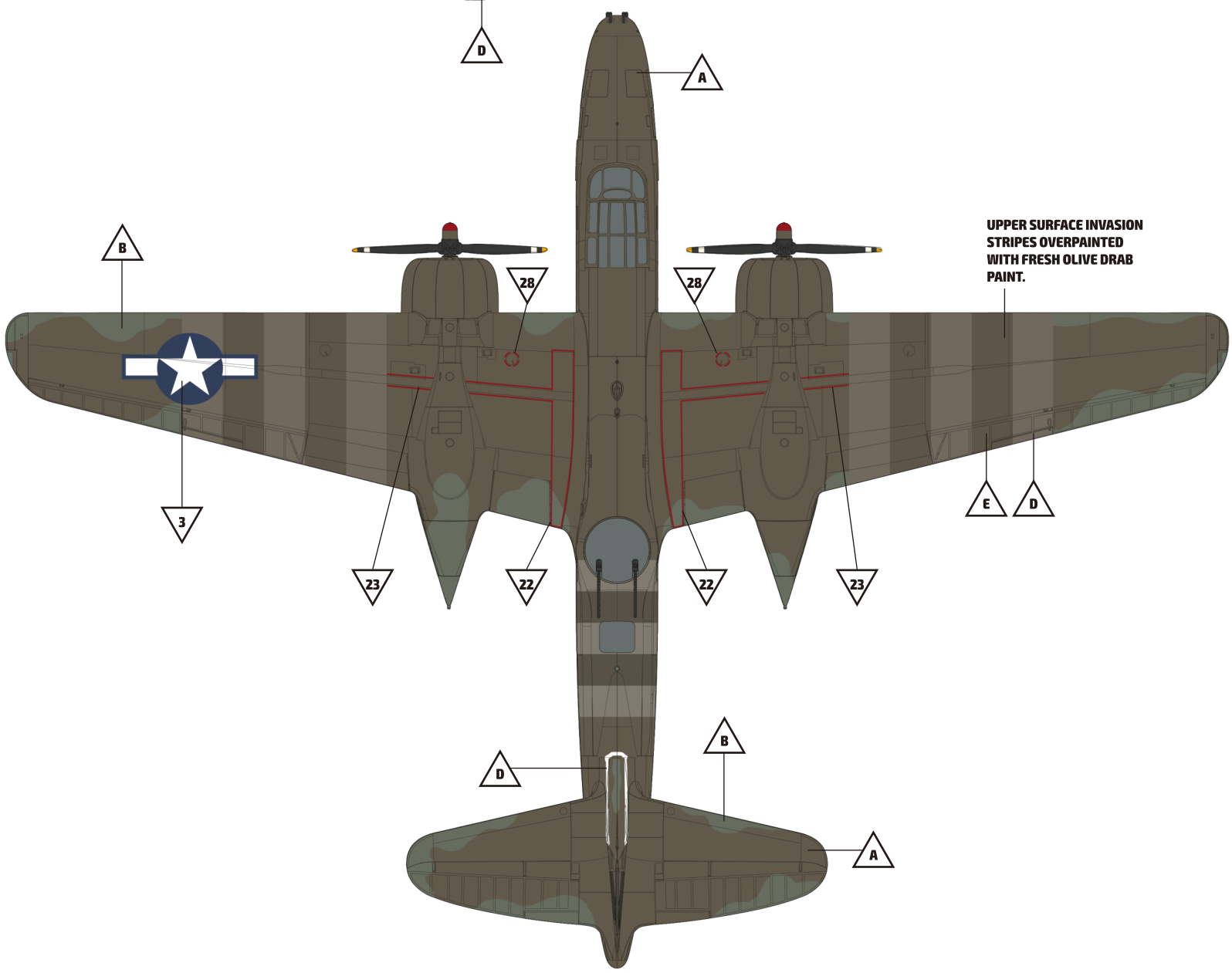

MARKING C — A-20G-25-DO, s/n 43-9224, 670th BS/416th BG, Paris, France, 4th November 1944

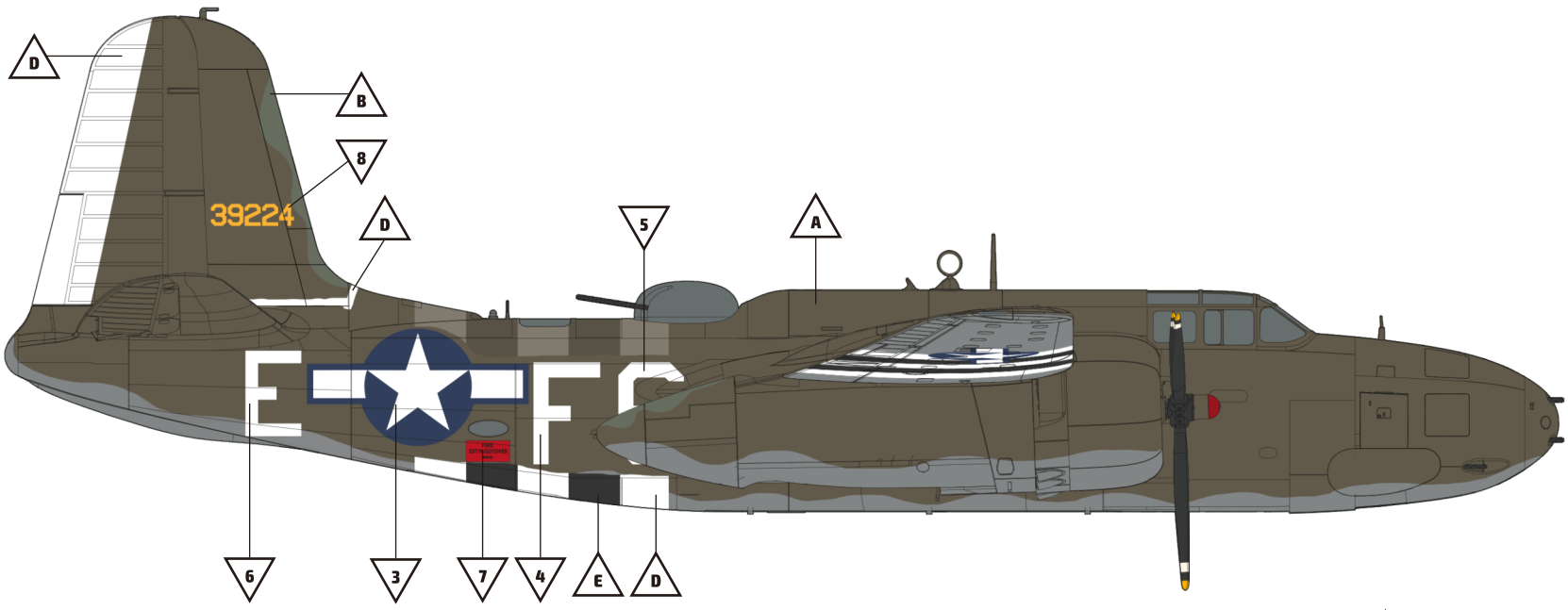

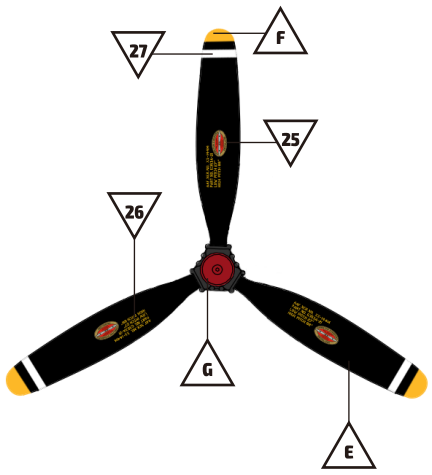

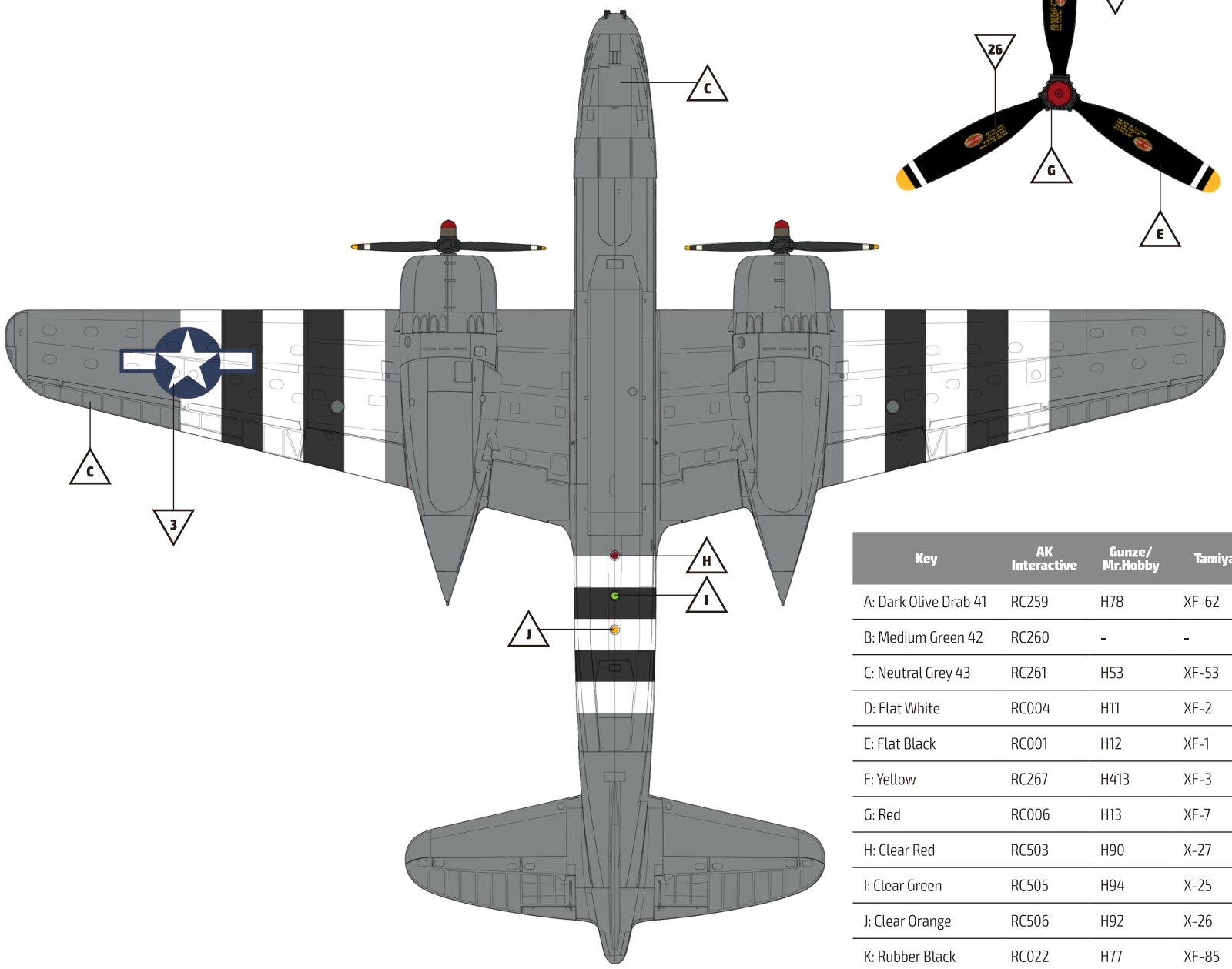

Key	AK Interactive	Gunze/ Mr.Hobby	Tamiya
A: Dark Olive Drab 41	RC259	H78	XF-62
B: Medium Green 42	RC260	-	-
C: Neutral Grey 43	RC261	H53	XF-53
D: Flat White	RC004	H11	XF-2
E: Flat Black	RC001	H12	XF-1
F: Yellow	RC267	H413	XF-3
G: Red	RC006	H13	XF-7
H: Clear Red	RC503	H90	X-27
I: Clear Green	RC505	H94	X-25
J: Clear Orange	RC506	H92	X-26
K: Rubber Black	RC022	H77	XF-85
L: Aluminium	RC020	H8	XF-16

Colour Guide

Key	AK Interactive	Gunze/Mr.Hobby	Tamiya
A: Dark Olive Drab 41	RC259	H78	XF-62
B: Medium Green 42	RC260	—	—
C: Neutral Grey 43	RC260	H53	XF-53
D: Flat White	RC004	H11	XF-2
E: Flat Black	RC001	H12	XF-1
F: Yellow	RC267	H413	XF-3
G: Red	RC006	H13	XF-7
H: Clear Red	RC503	H90	XF-27
I: Clear Green	RC505	H94	XF-25
J: Clear Orange	RC506	H92	XF-26
K: Rubber Black	RC022	H77	XF-85
L: Silver	RC020	H8	XF-16
M: Yellow-Green (Tinted Zinc Chromate)	RC262	—	XF-4:5+XF-1:1
N: Tan	RC019	H85	XF-55
O: Gunmetal	RC015	MC214	X-10
P: Engine Grey	RC296	H331	XF-77
Q: Steel	AK476	H18	XF-56
R: Burnt Metal	AK485	H76	87085
S: Plywood	RC014	H79	XF-78
T: Leather	RC11110	H47	XF-64

In cooperation with:

Illustration, manual layout and format : **HK Models & AK-Interactive**
Manual and assistance: **AK-Interactive**
Introductory text: **Cees Broere**